RACE TASK DESCRIPTION
CYBATHLON 2020 GLOBAL EDITION

V_2020-11-03

Changes compared the previous version V_2020-08-31 are highlighted in orange throughout this document.

CYBATHLON 2020 global edition – RACE TASK DESCRIPTION

For all inquiries please contact:

ETH Zurich, CYBATHLON
Haldeneggsteig 5
8092 Zurich
Switzerland
info@cybathlon.com

www.cybathlon.com

PREAMBLE

CYBATHLON is a unique competition for people with disabilities that promotes inclusion and drives the development of assistive technologies.

Due to the COVID-19 pandemic the CYBATHLON 2020 competition is held in a decentralized setting in which the participating teams compete at remote locations. This new event format is called *CYBATHLON 2020 global edition*.

The present document defines the framework, tasks and rules of each of the six disciplines constituting the competition at CYBATHLON 2020 global edition:

- Brain-Computer Interface Race (BCI)
- Functional Electrical Stimulation Bike Race (FES)
- Powered Arm Prosthesis Race (ARM)
- Powered Leg Prosthesis Race (LEG)
- Powered Exoskeleton Race (EXO)
- Powered Wheelchair Race (WHL)

The tasks selected for CYBATHLON 2020 global edition are based on the Race Task description originally published for CYBATHLON 2020. Typical challenges and situations that people with physical disabilities encounter in their everyday life inspired the selection and design of the tasks defined in this document. While some of the tasks were left unchanged as compared to the original document published for CYBATHLON 2020, others were modified to accommodate for the circumstances of CYBATHLON 2020 global edition.

Feedback from the teams and other experts has been considered and incorporated wherever possible.

Any changes to the tasks will be communicated to the teams.

If you have any comments or questions regarding the present document, we are happy to receive your message at competition@cybathlon.com.

CONTENTS

1. General Rules

The CYBATHLON competition consists of the following six disciplines:

- Brain-Computer Interface Race (BCI)
- Functional Electrical Stimulation Bike Race (FES)
- Powered Arm Prosthesis Race (ARM)
- Powered Leg Prosthesis Race (LEG)
- Powered Exoskeleton Race (EXO)
- Powered Wheelchair Race (WHL)

Even though many of the disciplines include the term "powered", it is also allowed to use unpowered, passive systems.

1.1 General Rules for teams and pilots

The following General Rules (GR) apply to all six CYBATHLON disciplines.

GR-1 A team consists of team officials that include the team manager (team contact person), pilot(s), backup pilot(s), care person(s), discipline manager(s), and support person(s).

GR-2 A team consists of at least one technology provider (at least one person from a research laboratory or a company, or a private individual) and one pilot (person with a physical disability). The technology provider is usually the developer of the device, who tunes and adapts the technology and provides technical support at the competition. In exceptional cases, when the pilot develops and brings his or her own technology, the provider and pilot can be the same person.

GR-3 A team can participate in several disciplines. Only one pilot can participate per team per discipline.[1] Pilots need their dedicated, personal device that must not be used by anyone else during their participation in the competition. In exceptional cases, several pilots may start using the same device.

GR-4 It is not allowed to exchange pilots between races

GR-5 Pilots must be at least 18 years of age on the first day of the competition.

GR-6 The minimal required level of the pilots' lesion or amputation is defined in the pilots' inclusion criteria for each discipline. Pilots who have more severe handicaps than those defined in the inclusion criteria can participate, although they might have a disadvantage in comparison to those pilots who more closely match the inclusion criteria. Each pilot is individually assessed by neutral matter experts (medical examiners) selected by the CYBATHLON organising committee to ensure that the pilot fulfils the inclusion criteria and that the pilot's general state of health allows safe participation.

GR-7 Pilots must have sufficient cognitive and communicative abilities to understand the Race Task Description and to follow the instructions of the competition staff.

GR-8 The teams shall provide the pilots with sufficient training of the tasks prior to the competition.

1.1.1.1 Comment

- Please find further information on the conditions of participation in the CYBATHLON registration forms.

[1] In case of free starting slots in a later registration phase or withdrawal of teams, more than one pilot of the same team will be allowed to start in the same discipline.

1.2 General Rules for technology, devices & Safety

GR-9 A systematic review of the assistive devices prior to the event is carried out to ensure that their use is safe for the pilots, their environment and other people involved prior to, during and after the competition. Technical documentation must be provided by the teams several months prior to the competition in accordance with registration and submission deadlines (pre-event TecCheck, see CYBATHLON registration form and TecCheck protocols). The descriptions and documentation of the devices are reviewed by neutral matter experts (technical examiners) selected by the CYBATHLON organising committee.

GR-10 'Spotters' supplement the safety precautions during the race in certain disciplines. The spotters accompany the pilots during the race and prevent them from falling, help them to stand up or to leave the track.

GR-11 It is not allowed to exchange or modify the technical device (or components thereof) during the competition. Maintenance or repair using identical spare parts is permitted.

GR-12 Prior to the competition, the hardware and software are checked remotely by the technical examiners. After this safety and function check (remote TecCheck), no changes may be made to the device. Inspections of the applied technology and devices by the technical examiners can occur at any time during the competition days. Teams who refuse the inspection will be disqualified.

GR-13 It is allowed to use commercial devices, prototypes or research devices. Teams are allowed to modify the devices and to optimize their function.

GR-14 All components (e.g. batteries, control units, tools, spare parts, etc.) that are used during a race must be carried by the pilots from the start to the end of the race. All components must be listed in the description of the device handed in for the TecCheck.

GR-15 During a race, only the pilots are allowed to maintain or replace components of their device. Between the races, any team official is allowed to maintain or replace components of the device. If components are replaced, only identical replacement parts may be used.

GR-16 One support person, who is a registered team official, is allowed to travel alongside the pilot on the competition field in a dedicated area. The support person is allowed to verbally interact with the pilot (e.g. for coaching). In case of any physical intervention (e.g. in case of a technical defect or an emergency) the race is terminated for that pilot. The pilot's current score is taken as the score for that race. Note that this rule is formulated differently for BCI (see rule BCI-5, page 17).

GR-17 Communication (wired or wireless) between the device and any third-party stationary site is not allowed, i.e. remote connection to control the device by any person other than the pilot is forbidden, except for emergency stop and data monitoring.

GR-18 Combustion engines are not allowed.

GR-19 Radio communication between the pilot and a team official or any other person is not allowed during a race.

1.2.1.1 Comment

- Spotters are trained to only intervene in case of an imminent risk of injury to the pilot.
- Please find further information on the required documentation of devices in the CYBATHLON registration forms.

1.3 General Race Rules

1.3.1 General Remarks about the competition infrastructure

- If not otherwise stated, all dimensions are given in millimetres and weights in kilograms.
- All ramps and the bars of the rough terrain may be coated to increase friction. CYBATHLON applies a paint containing quartz sand. Mixing ratio is 1:0.13, grain size is 0.1 – 0.6 mm. Anti-slip tape (e.g. Grip Tape) may be used as an alternative.
- For the surface in the centre part of the tilted path obstacle, CYBATHLON uses artificial grass that consists of 100 % polyamide/polyethylene monofilaments. The blades have a length of 30 mm and the density of the blades is 2610 g/m^2.
- Whenever possible, standard furniture and objects available at IKEA are used in the competition tasks.
- At a given competition site, the elements of the competition tasks must be built up on an even and solid surface. Additional flooring may be used.

1.3.2 Crossing the start- and the finish line

The start and the finish line of each task stand out clearly from the ground. These lines are considered to be crossed once the following part of the pilot or the vehicle reaches the vertical plane of the nearer edge of that line:

- BCI: foremost part of the avatar
- FES: N/A
- ARM: torso of the pilot
- LEG: torso of the pilot
- EXO: torso of the pilot
- WHL: foremost part of a wheel or track of the wheelchair

1.3.3 BCI and FES Bike Race

The general goal of the races is to, firstly, cover the race distance, and secondly, to cover it as fast as possible within a given race time limit. During a race a countdown is displayed at the competition venue that shows the remaining time. The pilots can ask their support person for the remaining time at any time.

1.3.3.1 Scoring

The race is finished for the pilot if the pilot passes the finish line or if the time limit is reached. To rank the pilots, in the first instance, the distance covered since the start of the race is determinative. In the second instance, i.e. if more than one pilot covers the same distance, the time taken to cover the distance is determinative.

Example 1

No FES pilot reached the finish line in their race within the time limit.

➔ The pilot who covered the longest distance within the time limit wins the round.

Example 2

All FES pilots reached the finish line in their race within the time limit, i.e. all pilots covered the same distance.

➔ The first pilot to reach the finish line wins the round, i.e. the fastest pilot/shortest time wins the round.

1.3.3.2 General Rules BCI/FES

GR-BCI/FES-1 A race is finished prematurely if terminated either by the pilot, by the referee due to a rule infringement, or by a physical intervention of a third person (e.g. a CYBATHLON *official* or a support person).

GR-BCI/FES-2 If the referee issues a warning, the warning is communicated to the pilot and is indicated on the video screen.

1.3.4 ARM, LEG, EXO AND WHL RACE

The general goal of the races is to, firstly, solve as many tasks as possible, and, secondly, to solve them as fast as possible within a given race time limit. A countdown is displayed at the competition venue that shows the remaining time. The pilots can ask their support person for the remaining time at any time.

1.3.4.1 Scoring

A race is finished if the pilot has attempted (i.e. solved or failed) each of the six tasks, if the time limit is reached, or if a violation of a rule mandates termination of the race. For each task, the time to attempt the task is measured and points are scored if the task is solved successfully. More difficult and/or tasks that are more relevant in daily life offer higher scores. The scores for the six tasks are:

14, 15, 16, 17. 18, 20 points

To rank the pilots, in the first instance the total number of scored points is determinative. In the second instance, the time needed to complete the solved task(s) is determinative. If more than one pilot solved the same task(s) and, thus, obtained the same total number of points, the cumulated time required to complete the solved task(s) is determinative.

<u>Example 1</u>
One pilot in a WHL race solved five tasks (e.g. 85 points); another pilot solved four tasks (e.g. 67 points).

➔ The pilots are ranked by the sum of the scored points. The pilot who solved five tasks is ranked higher than the pilot who solved four tasks.

<u>Example 2</u>
Two pilots in an ARM race both solved two tasks, but not the same two tasks.

➔ The pilots are ranked by the sum of the scored points. The pilot who scored 34 points is ranked higher than the pilot who scored 32 points.

<u>Example 3</u>
Two pilots in a LEG race both solved the same three tasks; consequently, they also scored the same number of points (e.g. both 45 points).

➔ The pilot who solved the three tasks in the shortest time (cumulated time of the three solved tasks) is ranked higher.

1.3.4.2 General Rules ARM/LEG/EXO/WHL

GR-ARM/LEG/EXO/WHL-1 The races take place on racetracks that consist of up to six discipline-specific tasks. The area of each task is defined by a start line, two side lines and a finish line. These lines are perpendicular to each other.

GR-ARM/LEG/EXO/WHL-2 The tasks are set up in a predefined order. The racetrack can be set up in one of the following layouts depending on the space available at the competition venue:
In case of very limited space, other layouts are possible and can be approved after consultation with the CYBATHLON organising committee.

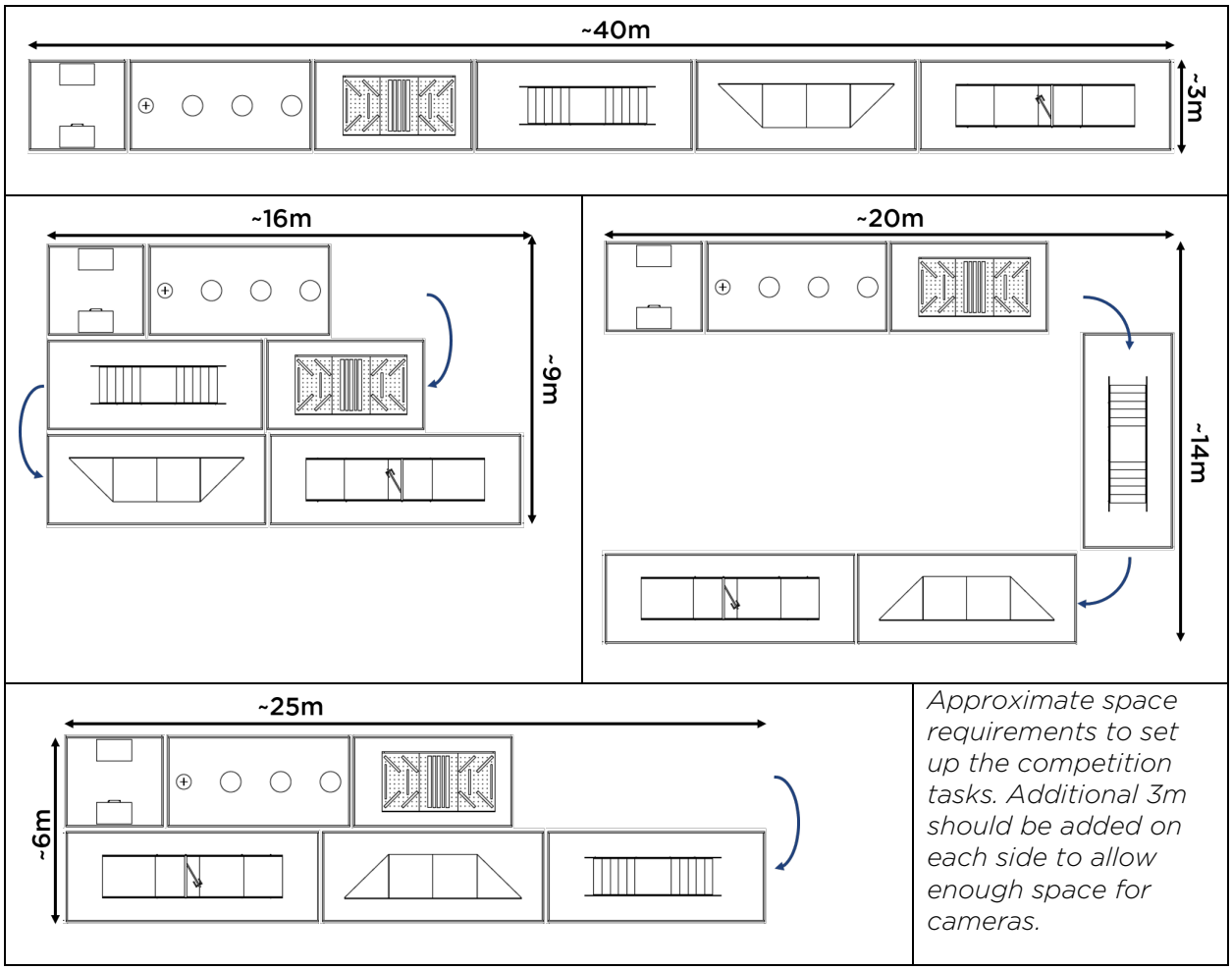

Approximate space requirements to set up the competition tasks. Additional 3m should be added on each side to allow enough space for cameras.

GR-ARM/LEG/EXO/WHL-3 A task ends when the pilot passes the finish line of the task. If not otherwise stated, each obstacle (e.g. ramp, staircase) in a task must be crossed once in the direction of the racetrack.

GR-ARM/LEG/EXO/WHL-4 A task is failed if it is terminated prematurely by the pilot, by the referee due to an infringement, or by a physical intervention from a third person, i.e. a CYBATHLON official or a *spotter*.

GR-ARM/LEG/EXO/WHL-5 Pilots must transition from the finish line of one task to the start line of the next task autonomously and without any undue delay. The referee may issue a warning to the pilot in case of any undue delay.

GR-ARM/LEG/EXO/WHL-6 If a pilot is issued three warnings within the same race, the race is terminated for that pilot. The pilot's current score is taken as the score for that race. Each warning is communicated to the pilot and is indicated on the video screen.

GR-ARM/LEG/EXO/WHL-7 In case of task termination, the pilot must proceed to the start line of the next task (or finish line of the last task) without any undue

delay. If required, spotters may be asked to intervene and and to help to reach the finish line of the respective task (or finish line of the race).

GR-ARM/LEG/EXO/WHL-8 It is permitted to skip tasks and to continue with the next task. In this case, the task elements must be passed on the right- or left-hand side (in race direction).

GR-ARM/LEG/EXO/WHL-9 The tasks must be attempted in the order of appearance on the racetrack. It is not allowed to reattempt a task after having passed the finish line of the task, after skipping the task or after the task is failed.

GR-ARM/LEG/EXO/WHL-10 If a side line marking the border of the task on either of the sides is crossed, i.e. if any part of the device (including crutches) or pilot touches the ground beyond a side line, the task is failed. Furthermore, the task is failed if any object of the task touches the ground beyond the side lines or the start or finish line of the task by an action of the pilot. The width of the tasks is 2.95 ± 0.05m.

GR-ARM/LEG/EXO/WHL-11 An interim time is taken every time a task is completed. Crossing of the start line and the finish line of each task is indicated by a green flag.

GR-ARM/LEG/EXO/WHL-12 Task failure is indicated by a red flag and also orally communicated by the referee to the pilot ("task fail!"). [2].

GR-ARM/LEG/EXO/WHL-13 Obstacles and objects that are not asked to be moved by the rules per se, must not be displaced. Otherwise, the task is failed.

GR-ARM/LEG/EXO/WHL-14 A jump start, i.e. starting the race before the countdown has expired leads to the abortion of the race.

1.4 General Rules on the Competition Mode

1.4.1 Definitions

- A 'race' is a timed attempt of a single pilot to solve the entire set of competition tasks of a given discipline. 'Race' and 'attempt' are used interchangeably in the present document.
- A 'competition' is the entirety of all rounds of a discipline.

1.4.2 General

In each discipline, teams compete for three medals: gold, silver and bronze. All winning teams (first, second, third place) are given two awards, one to the pilot and one to the technology provider.

1.4.3 Preparation prior to racing

- The pilots shall be ready for their race at least 10min (refer to latest information) minutes before the scheduled start time.
- Each pilot shall be prepared to start the race when instructed to do so. Any undue delay in this regard results in the disqualification from the concerned race.

1.4.4 Competition Mode

[2] If the pilot does not agree with the referee's decision, he/she must decide whether to continue or terminate the task. If the task is continued, the pilot must follow the procedures of an appeal against a referee's decision during a race (see Annex 1). If the task is terminated, no appeal can be filed

Each pilot attempts the racetrack three times in a time window of three hours. The performances of the races are independent of each other. Each pilot is ranked relative to the performance of all other pilots, based on their highest total score in a single attempt.

If two or more pilots achieve the same total score in the same total time in their best run, the pilot with fewer warnings in ranked better. In case the tie persists after this comparison, the pilots' second-best runs are compared according to the same criteria and so forth. If two pilots are tied in all their runs, their final ranking is determined by lot.

The pilots and teams who rank 1st to 3rd in the final ranking are awarded the medals.

For a summary, see table below:

<table>
<tr><th>Discipline</th><th>Race end</th><th>Ranking criteria</th><th>Final ranking</th></tr>
<tr><td>ARM</td><td rowspan="4">1. Finish line of final task reached
2. Time limit reached
3. Three warnings received</td><td rowspan="4">1. Number of points scored
2. Total time taken for scored points (i.e. time of failed tasks is not included)
3. Number of warnings</td><td rowspan="6">Pilots ranked relative to the performance of all other pilots in the same discipline, based on their highest total score in a single attempt.</td></tr>
<tr><td>LEG</td></tr>
<tr><td>EXO</td></tr>
<tr><td>WHL</td></tr>
<tr><td>BCI</td><td rowspan="2">1. Finish line reached
2. Time limit reached
3. Three warnings received</td><td rowspan="2">1. Distance covered
2. Total time taken for the distance covered
3. Number of warnings</td></tr>
<tr><td>FES</td></tr>
</table>

1.5 General communication

The verbal communication during the races shall be held in the following form:

From the referee to the pilot in the following situations:

a) Task fail, e.g. after the violation of a task rule: “task fail”

b) Race fail, i.e. if a BCI pilot is not able to connect to the BCI game server: “race fail”

c) Warnings: “warning number X” (formulated differently for BCI: no verbal communication from referee to the pilot in case of a warning to avoid distraction of the pilot)

d) Race stop, e.g. after the issue of three warnings: “race stop”

e) Confirmation of correct execution of predefined subtasks: “Ok” (or “Not ok” if referee does not agree with the current execution when the pilot asks for confirmation).

From the pilot to the referee in the following situations:

f) Pilot wants to skip a task: “skip task”

g) Pilot is stuck in a task or wants to skip the task and requires help by the spotters to do so: “skip task - help”

h) A pilot suspects a refereeing error and wants to submit an appeal after the race: “continue task”

i) Emergency: “S.O.S” (leads to the stop of the race)

1.6 Appeals

In case of an occurrence which is considered as unfair by one of the teams, a written appeal can be submitted to the competition management. For detailed information on the appeals and appeals procedures, see Chapter 8.1 ‘Annex I – Appeals & Disciplinary Actions: DEFINITIONS AND PROCEDURES’

In case of any inconclusive occurrence or situation beyond a referee’s decision, rules or regulations, the Head of Competition is the supreme authority.

2. Brain-Computer Interface Race

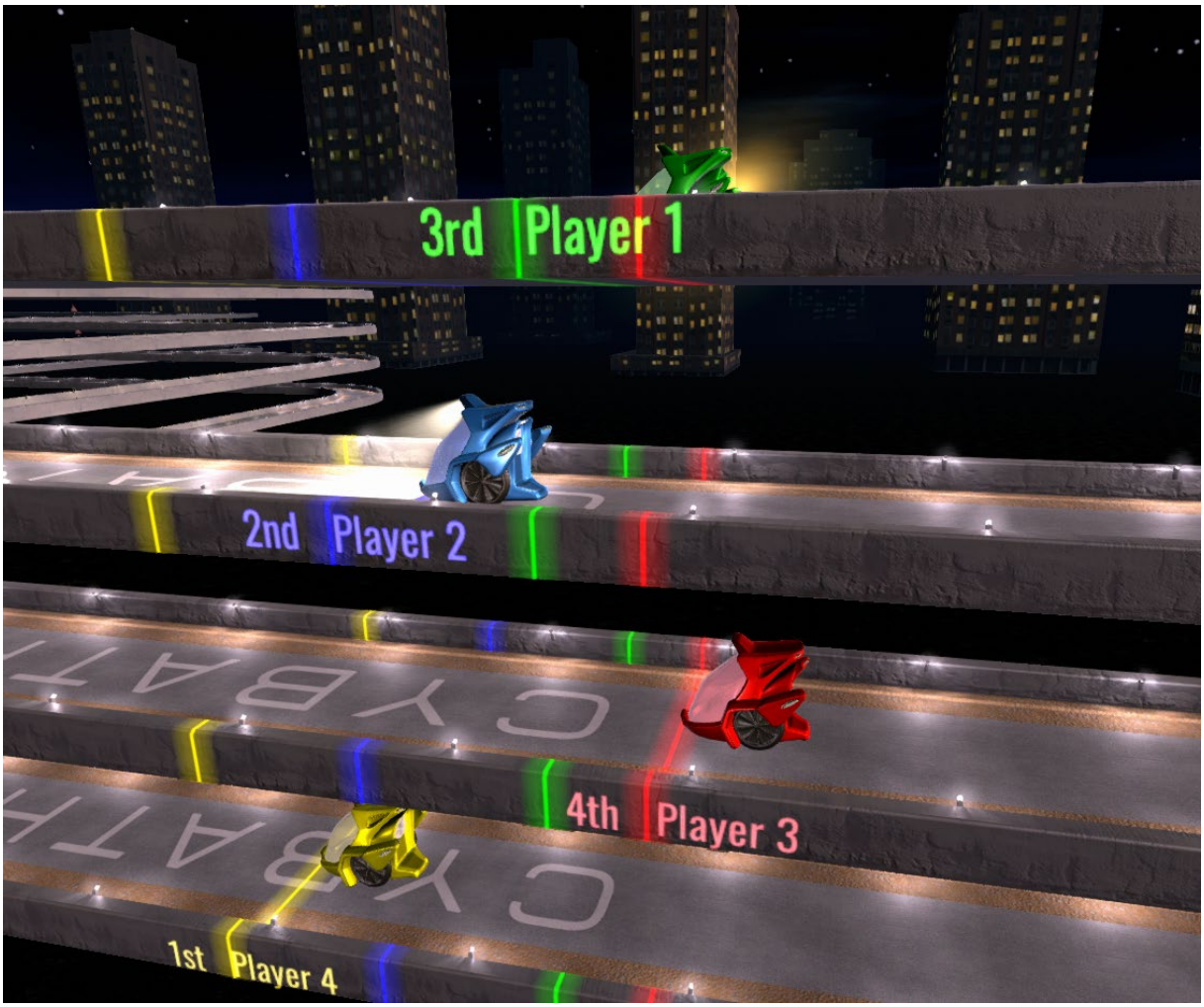

Screenshot of the Brain-Computer Interface Race game 'BrainDriver' showing the avatars of the four pilots.

2.1 Introduction

Pilots with quadriplegia use a Brain-Computer Interface (BCI) to control a vehicle (avatar) in a computer game. Commands to control the computer game are triggered by the BCI after the appropriate brain signals were detected. The reliability and precision of BCIs are challenged in the competition in order to stimulate the development of BCIs with various applications suitable for daily life. For example, for people with limited ability to move (e.g. quadriplegia, advanced neurodegenerative diseases), BCIs could be used to control different types of devices, e.g. a computer, a robotic arm or a wheelchair.

The computer game is a racing game developed specifically for the Brain-Computer Interface (BCI) Race. Each pilot's avatar drives on an individual road (lane). The goal is to cover as much of the total virtual race distance (500 meters) as possible within the race time limit. The pilot who crosses the finish line, or the pilot who covers the longest distance within the race time limit is the winner. During the race, the pilots sit in front of their individual screen and see their avatar.

2.2 Inclusion criteria

2.2.1 Pilots

In addition to the general inclusion criteria described in section 1.1, the pilots must fulfil the following criteria to be eligible for participation:

- The result of the formal neurological examination using the American Spinal Injury Association (ASIA) International Standard for Neurological Classification of Spinal Cord Injury (ISNCSCI) (https://asia-spinalinjury.org/wp-content/uploads/2019/04/ASIA-ISCOS-IntlWorksheet_2019.pdf) must correspond to a neurological level of injury of C5 or above (i.e. a spinal cord injury with impairment at and below the neck) as well as an ASIA Impairment Scale (AIS) of A, B or C.
- At least 3 out of 5 key muscles (as defined in the ISNCSCI form) in each extremity must have a muscle function grading below 3 (i.e. no antigravity muscle strength).
- Pilots are not vulnerable to cyber-sickness, epilepsy or similar problems.

2.2.2 Technology

In addition to the General Rules described in section 1.2, the following criteria apply to the BCI hardware:

- While the primary envisioned BCI type is electroencephalography (EEG), other brain activity measurements such as functional near infrared spectroscopy (fNIRS) are also permitted as long as they primarily measure brain activity.
- Electrodes can be wired or wireless, and the BCI amplifier can be powered by any means as long as the technology is safe.
- Skin-piercing electrodes or any other invasive technologies are not permitted. Other than that, the choice of electrode type, cap and gel (if any) are at the discretion of the participating team.
- Pilots have to watch the race screen during the race. It is not allowed to provide any additional (artificial) stimulation (e.g. transcranial magnetic stimulation) or feedback in any modality to the pilot via the BCI system. Thus, visually evoked potentials (SSVEPs, P300, etc.) may not be used as the source of the input signal for the race unless they are elicited by the race animation provided by the organisers and not by an additional display. In addition, it is not allowed to provide feedback on the current state of the analysis, e.g. the current state of the signal (how close the pilot is to sending a command).

- During the mandatory on-site TecCheck prior to the competition, judges may attach EOG electrodes to check for the presence of eye artefacts (if not used anyway for artefact removal).
- During each race, each pilot is recorded by video. The video material can be used for review by the CYBATHLON competition management. In addition, the teams must record all signals that are used to process and control the game. After each race, the teams must be prepared to provide the software together with the raw signals (e.g. by using an external drive or cloud storage) for spot checks by the CYBATHLON competition management. In case of an infringement of a rule, the team can be disqualified after the competition.

The following criteria apply for the BCI software:

- Ocular control, control by facial muscles or the use of any other muscular activity is not permitted.
- Artefact removal is crucial. Teams have to confirm in writing prior to the event that muscle and eye movement artefacts and other artefacts are removed or otherwise do not affect the command process, or that the classifier is blocked by artefact detection and not misused as commands to control the game. For example, the pilot should not be able to send commands by blinking with the eyes repeatedly, but should also not be able to prevent commands from being sent by blinking repeatedly.
- Before the event, teams are required to send a description of the artefact removal procedure and examples of the signals to be checked by external judges who are experts on signal processing. All submitted documents are treated confidentially. The documentation will be requested from registered teams by the CYBATHLON organising committee well in advance to allow ample time for corrections, if necessary.
- Once artefacts are removed, any signal feature and classification procedure can be used in the BCI as long as it primarily reflects volitional brain activity, not automatic subconscious processes (e.g. alpha blockade). Teams have to send the description of the inference process to be checked by external judges before the race.
- Using brain signals associated with attempted movements of partially paralysed and non-paralysed limbs, which result in some residual actual movement, are not allowed.
- Communication regulations and communication protocols for the teams' computers to the competition system will be communicated at a later stage. It is the responsibility of the teams to implement and follow the instructions provided by CYBATHLON organising committee.

2.3 Specific rules

BCI-1 It is not allowed to turn off the BCI system during the race.

BCI-2 Pilots are not allowed to intentionally use eye or muscle activity to control their BCI. Extensive or deliberate eye or muscle activity leads to a warning.

BCI-3 If a pilot is issued three warnings within the same race, the race is terminated for that pilot. The pilot's current score is taken as the score for that race.

BCI-4 Pilots who are not able to connect with or send a command to the game in the preparation phase right before the start of the race are not allowed to participate in the race, i.e. the race is failed for these pilots.

BCI-5 In the race, pilots always see their corresponding avatar. It is permitted to remove the background, i.e. change to a black background.

BCI-6 One support person, who is a registered team official, is allowed to accompany the pilot to the competition field. Once the race has started, the support person is not allowed to interact with the pilot or the BCI system in any way (e.g. *coaching is not*

allowed). In case of any intervention during the race (e.g. in case of coaching, a technical defect or an emergency), the race is terminated for that pilot. The pilot's current score is taken as the score for that race.

2.4 Task Description

The pilots have to send appropriate commands using their BCIs within the correct time frame while virtually driving on a racetrack that is divided into dedicated zones (tasks), indicated by road signs or lines on the ground. After the race has started, the avatar moves forward towards the finish line by itself, even without receiving any input commands from the pilot or if constantly receiving wrong input commands. The pilots can send up to three different commands to control their avatar. A higher number of independently controlled commands increases the chance of winning the competition.

Sending the appropriate command at the right time is required to maintain the avatar's speed, while wrong input or no input (if input is required) slows down the avatar. Pilots can trigger their avatar to turn left (LEFT) or right (RIGHT). There will also be sudden changes in the environment, i.e. streetlights turning off, upon which the avatar is slowed down until the pilot reacts with the appropriate BCI input (HEADLIGHT). In certain parts of the game, no commands must be sent (NOINPUT) and avatars decelerate if the pilots send any command by accident.

LEFT, RIGHT and NOINPUT commands can be anticipated by the pilot, whereas the HEADLIGHT command must be generated in response to a changing environment.

Commands	*Description*
LEFT/RIGHT	As soon as the avatar is in the LEFT/RIGHT task ahead of a turn (i.e. between the two white lines ahead of the turn), the LEFT/RIGHT command should be sent to indicate turning left or right. This maintains the avatar's speed and turns it left or right. The avatar remains in the LEFT/RIGHT state until it has completed the turn or until it receives another command. Thus, a correct command may be aborted by subsequently sending an incorrect command. Also, an incorrect command may be corrected by subsequently sending the correct command. The goal is to send the correct command as early as possible after having reached the task.
HEADLIGHT	While the avatar is driving through a HEADLIGHT task, the streetlights flicker and then turn off at a random time. Since driving in the dark without headlights is dangerous, the avatar slows down. In order to regain the avatar's initial speed, the headlights must be turned on by sending the HEADLIGHT command. The earlier the HEADLIGHT command is received once the street lights have turned off, the bigger is the advantage for the pilot's avatar. HEADLIGHT tasks are straights.
NOINPUT	In the NOINPUT task, no command should be sent to benefit from the maximum velocity. Any command registered during the NOINPUT task slows down the avatar for a certain duration or until the next task is reached. NOINPUT tasks are straights.
Incorrect commands	Triggering incorrect commands slow down the avatar. Triggering commands where none are required is considered incorrect.

Transition to the NOINPUT task	Every time the avatar transitions to a NOINPUT task, all prior commands are cleared. The avatar travels at the base velocity of the NOINPUT task until a new command is received.

The order of the tasks appearing along the racetrack is not known to the pilots prior to the competition and may be different for each race.

Each racetrack fulfils the following criteria:

- The zones at the start and at the end of the racetrack are straight 'NOINPUT' tasks.
- Between the start and the end zone, each task type appears four times, i.e. four times 'LEFT', 'RIGHT', 'NOINPUT', and 'HEADLIGHT'.
- Straight zones and turns alternate.
- Not more than two consecutive turns point in the same direction.

A copy of the BCI game and the game manual describing the details of the game are available to the registered teams. It can be used for testing and practicing. Registered teams can request a copy of the game from bci@cybathlon.com.

2.5 Competition mode and scoring system

See section *1.3* and *1.4.*

Time limit: 4 min
Race distance (virtual): 500 m

Only fully completed tasks are counted for the result of a pilot, i.e. if a pilot is in the middle of a task when the time limit is reached, the distance covered in this task is not included in the pilot's result.

3. Functional Electrical Stimulation Bike Race

FES Bike Race set up.

3.1 Introduction

Pilots with motor complete spinal cord injury (SCI) are equipped with Functional Electrical Stimulation (FES) devices, enabling them to perform a pedalling movement on a recumbent bicycle.

Regular FES cycling exercise after SCI has been shown to lead to physiological adaptations, such as improvements in bone density, cardiovascular as well as respiratory fitness, and increase of muscle mass. Besides the application of FES cycling in rehabilitation, it can be of high recreational value to people with SCI.

To successfully participate in the competition, the pilots build up their fitness by specific FES training regimens prior to the event. During the race, besides absolute muscular strength and endurance, the optimized temporal activation of muscles by the electrical stimulation plays a crucial role in minimising muscle fatigue effects. Any stimulation pattern can be applied to any leg muscle, as long as the stimulation technology and pattern are safe.

The pilots will compete on recumbent bikes which are mounted to stationary, direct drive smart bike trainers. The pilots' performance will be represented visually. The goal is to cover as much of the race distance as possible within the race time limit.

3.2 Inclusion criteria

3.2.1 Pilots

In addition to the general inclusion criteria described in section 1.1, pilots must fulfil the following criteria to be eligible for participation:

- Spinal cord injured pilots with paraplegia and a complete loss of motor function in the lower limbs (AIS A or B, http://www.sci-info-pages.com/levels.html) are included.
- Pilots with lesions affecting the control of trunk, arm and/or neck must be checked individually, as pilots must have sufficient voluntary control of trunk, arms and neck to steer the bike and stabilise the upper body while riding down the start ramp and navigating through turns.

3.2.2 Technology

In addition to the general rules described in section 1.2, the following criteria apply for the FES Bike technology:

- The cycling device can be commercially available or custom-made. The cycling device structure and function are allowed to be optimised for better mechanical efficiency.
- Only passive cycling devices without actuation are allowed. The only actuation is provided through the FES-stimulated legs of the pilot.
- It is not allowed to place any technical equipment required for the race (e.g. FES stimulator, control units, batteries or similar) on the floor, on a table or similar next to the pilot. I.e. all equipment needed by the pilot to complete the race must be attached to the trike. The only exceptions are the stationary bike trainer and the trike itself.[3] Any number and any size of wheels are allowed.
- The FES stimulator can be commercially available or custom-made. In any case, the stimulator has to fulfil the standard regulations for electrical safety, including the latest IEC standards 60601-1 and 60601-2-10 (or similar regulations applied in the country of

[3] The FES stimulation set-up should allow for untethered, non-stationary cycling.

development), which describe particular requirements for the basic safety and essential performance of transcutaneous nerve and muscle stimulators.

- Surface and implanted stimulation technologies are allowed. The implants must be medically stable for at least six months and free of complications (e.g. infections) prior to the competition.
- FES stimulation intensity and pattern may be adjusted by the pilots during a race so that they can apply their own strategy to minimise effects of muscle fatigue.
- Any control strategy or stimulation pattern is allowed to stimulate the muscles of the lower extremities such as quadriceps, hamstrings, gluteal and calf muscle groups. It is not mandatory to stimulate all of these muscles.
- Any number of stimulation channels is allowed.
- The FES stimulators may apply closed-loop control strategies using sensors applied to the pilot or the bike. It is also allowed to manually trigger the stimulator.

3.3 Specific rules

FES-1 If a pilot gets stuck in the race (e.g. due to fatigue or malfunction of the stimulator or bike), the race is terminated for that pilot.

FES-2 During the race, hands or arms are allowed to be used to push on the legs to overcome pedalling dead points, but not to support on-going propulsion. Extensive use or any other misuse of hand or arm pushes leads to a warning. If a pilot is issued three warnings within the same race, the race is terminated for that pilot.

FES-3 All participating teams use the same type of stationary bike trainer.

3.4 Task description

The aim of the races is to cover the race distance of 1200m as quickly as possible or, in case none of the pilots reaches the finish line, to cover as much distance as possible within the race time limit of 480s.

Each race consists of a warm-up period and the actual race period.

The warm-up period substitutes a physical ramp or initial push by a support person that is usually required to overcome the system-inherent moment of inertia and static friction when starting from a complete standstill. During the warm-up period, the bike trainer is accelerated to a maximum speed of 10km/h.

The movement of the legs during the warm-up period can be accomplished by the following means:

- the pilot's arms
- FES to the pilot's legs
- with the help of a support person that moves the pilot's legs

A combination of these three means is also allowed.

Acceleration during the warm-up period may be initiated at any time during the 30s warm-up period. At the end of the warm-up period the race period starts automatically (i.e. rolling start). Acoustic and visual signals mark the start of the warm-up period as well as the start and end of the race period.

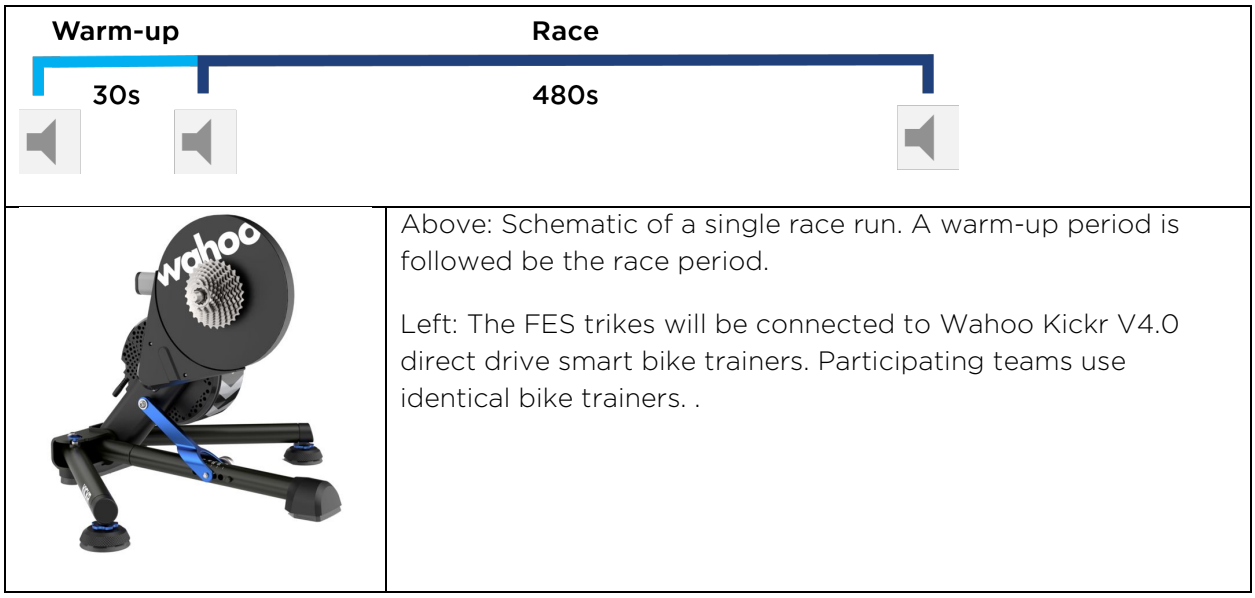

Above: Schematic of a single race run. A warm-up period is followed be the race period.

Left: The FES trikes will be connected to Wahoo Kickr V4.0 direct drive smart bike trainers. Participating teams use identical bike trainers. .

3.5 Competition mode and scoring system

See also sections *1.3* and *1.4*.

Warm up period:	30 s
Time limit:	8 min
Race distance:	1200 m

4. Powered Arm Prosthesis Race

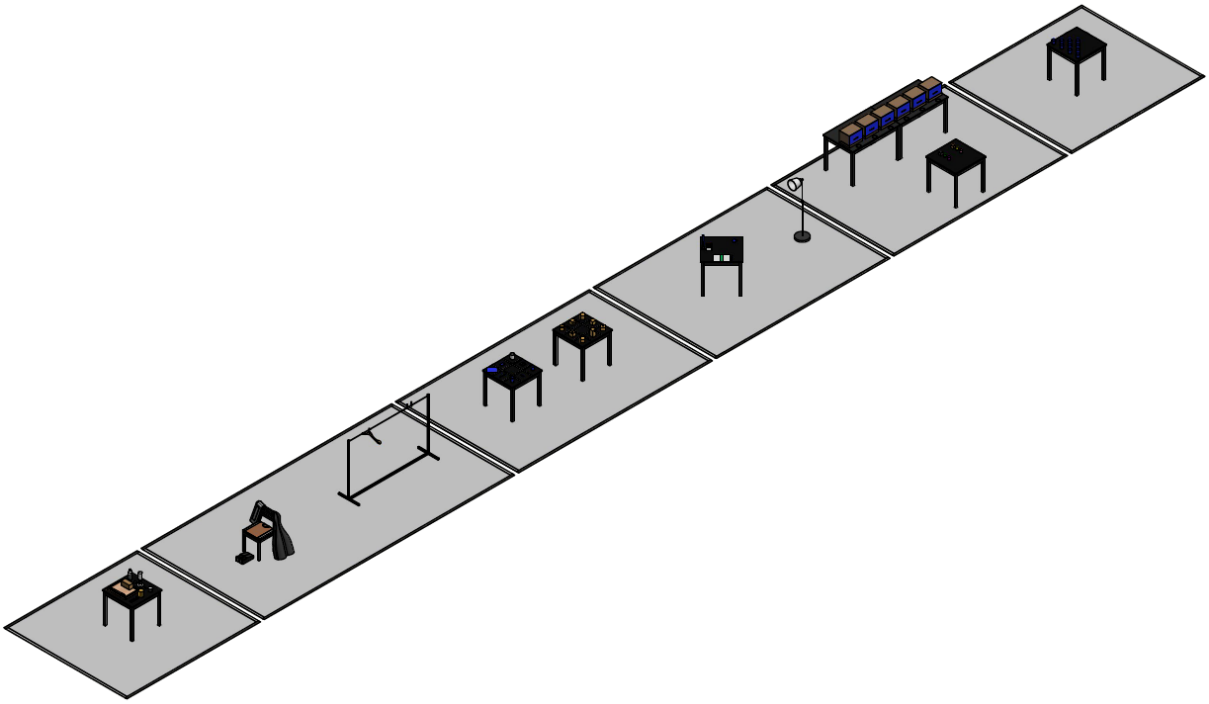

Overview of the Powered Arm Prosthesis Race tasks.

4.1 Introduction

Pilots with transradial or more proximal arm amputation or dysmelia are equipped with exoprosthetic devices (arm prostheses). The pilots are challenged by a wide range of tasks related to daily life activities. In some tasks, the pilots are allowed to use both hands and arms, as well as any other part of the body to manipulate objects. In other tasks, pilots are faced with situations that explicitly challenge the performance of their prosthesis, i.e. the synergy between the pilot and the technology. In these tasks, the pilots are only allowed to manipulate certain objects or parts of the object with the prosthetic hand. These objects/parts are always coloured blue. In a third type of task, pilots are challenged to identify objects without being able to see them, i.e. they must rely on sensory information provided by the arm prosthesis.

The goal is to solve six different tasks within the race time limit.

4.2 Inclusion criteria

4.2.1 Pilots

In addition to the general inclusion criteria described in section 1.1, pilots must fulfil the following criterion to be eligible for participation:

- Transradial or more proximal amputation or dysmelia of at least one arm.

4.2.2 Technology

In addition to the general rules described in section 1.2, the following criteria apply for the powered arm prosthesis technology:

- Passive and active prostheses are allowed.
- The prosthetic device is allowed to have any number of actively driven (powered) joints (e.g. for hand opening/closing or wrist pronation/supination). The prosthetic device can have several passive or mechanically coupled joints (e.g. at the fingers). Any kind of body powered (e.g. cable driven) system is also allowed.
- Surface or implanted electrode systems can be used to access sensory or motor nerves.
- Osseointegration is allowed if the pilot is in a clinically stable condition and any health risks (e.g. infections) can be excluded.
- There is no weight limitation for the prosthesis.

4.3 Specific rules

ARM-1 Pilots are not allowed to use items such as trailers, backpacks, bags, pockets, ropes or their clothes to carry objects of the race track (e.g. tools, plates, and bags of the tasks), but it is allowed to use such aids to carry components of the device (e.g. batteries, control units, tools, replacement equipment, etc.).

ARM-2 Any object on the racetrack that has blue parts is only allowed to be manipulated or touched with the prosthesis. If a pilot uses two prostheses, a blue object is only allowed to be manipulated or touched with one prosthesis at a time. Blue objects are only allowed to be manipulated or touched at the blue parts with the prosthetic hand (not including wrist, lower or upper arm).

ARM-3 While manipulating or holding a blue object, it is not allowed to physically support or guide the movement of the prosthesis with the other (non-prosthetic) arm or hand (or any other part of the body).

ARM-4 While manipulating or holding a blue object, it is not allowed to physically change prosthetic hand or finger configurations with the other hand. However, it

	is allowed to change a mode of the prosthesis with the non-prosthetic hand, e.g. by pushing a button on the prosthesis.
ARM-5	Objects falling on the floor are allowed to be picked up.
ARM-6	It is allowed to grasp objects of the racetrack that are not blue or do not have blue parts with the prosthetic hand to manipulate blue objects (e.g. to use it as a tool), but not with the non-prosthetic hand.

4.4 Task description

Each task is described in the following sections. If not otherwise stated, the direction of the race is (bottom) left to (top) right in all of the following figures.

4.4.1 Breakfast

4.4.1.1 Introduction

The ability to use kitchen utensils (e.g. cutlery, can opener etc.) is critical for independent living and involves countless tasks which are typically performed by a dexterous bimanual interaction. Also, some objects in the kitchen are very delicate to handle and require a very precise control of grip force.

In this task, a breakfast table must be prepared. The task includes cutting bread, unwrapping a pack of sugar cubes and opening a bottle, a jam jar and a can. Furthermore, a candle must be lit.

4.4.1.2 Elements

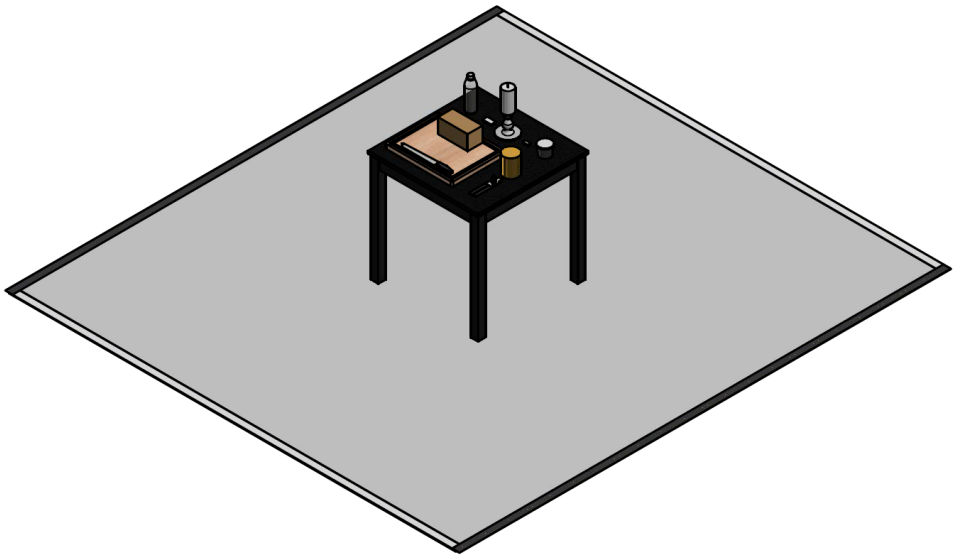

Top: Illustration of task set-up. Bottom left: initial layout of task objects. Bottom right: Layout and dimensions of task set-up.

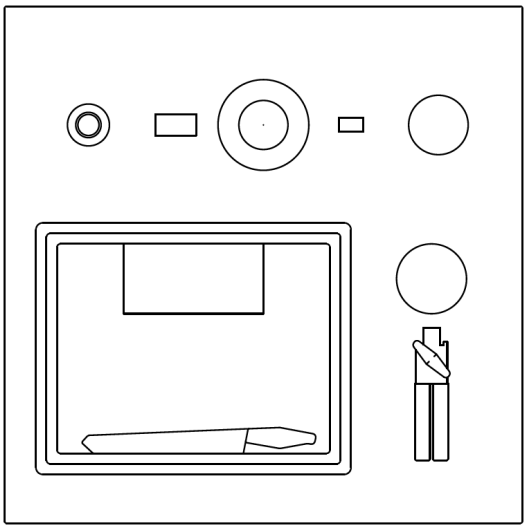

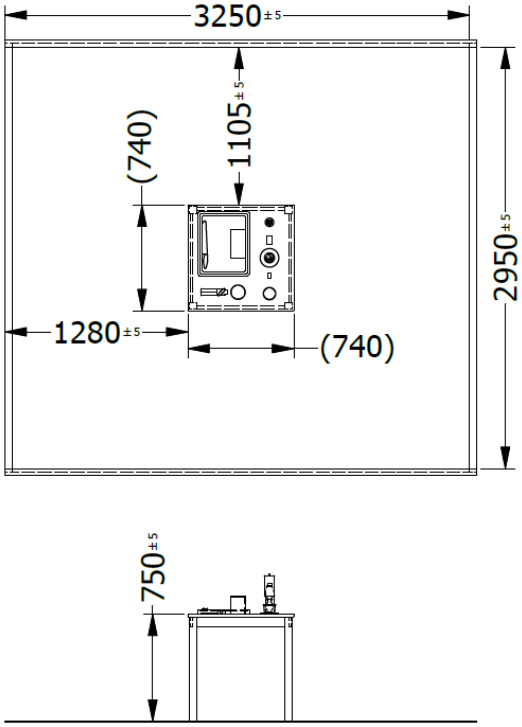

Object	*Photo*	*Specification*		*Brand/Link/ Model*
Foam		brown	l: 200 mm w: 100 mm h: 100 mm	--
Breadboard		brown wood/bamboo	w: 3400 g l: 450 mm w: 360 mm h: 30 mm	IKEA APTITLIG
Breadknife		grey-black steel-synthetic	w: 254 g l_{blade}: 230 mm	IKEA VARDAGEN
Pack of sugar cubes		Paper	w: 4.4 g l: 35 mm w: 20 mm h: 10 mm	Attundo
Jam jar with lid		transparent-white glass-aluminium fastening moment: ~4.0 Nm	w: 154 g Ø: 85 mm h: 68 mm 230 cl	agrimarkt.info
Plastic bottle with lid		transparent plastic fastening moment: ~1.2 Nm	w: 30 g Ø: 60 mm h: 220 mm 330 cl $Ø_{lid}$: 30 mm	bottleshop.ch
Can		golden tin	w: 72 g Ø: 100 mm h: 120 mm	Fieger
Can openers		black/white-metal plastic/metal	w: 157 g l: 190 mm w: 45 mm h: 50 mm	Westmark "Sieger" version for left or right hand use will be provided, depending on pilot's choice
Candle holder		white wood	w: 27 g $Ø_{top}$: 70 mm h: 130 mm	IKEA Ersätta

Object	*Photo*	*Specification*		*Brand/Link/ Model*
Candle		white wax	w: 37 g h: 140 mm Ø: 70 mm	IKEA Sinnlig
Box of matchsticks		Cardboard, wood	w: 5 g 58x31x12 mm	- -
Task objects. The depicted objects are not proportional in size.				

4.4.1.3 Task rules

ARM-BREAK-1 A piece of approximately 20 mm of constant width must be cut off the foam with the breadknife. The piece must be clearly separated from the rest of the foam.

ARM-BREAK-2 The paper must be separated completely from the sugar cubes.

ARM-BREAK-3 The lid of the jam jar must be separated completely from the glass. If the glass breaks into pieces, the task is failed.

ARM-BREAK-4 The lid of the plastic bottle must be separated completely from the bottle.

ARM-BREAK-5 The can top must be completely removed from the can by using the can opener.

ARM-BREAK-6 The candle must be lit using a matchstick. Three matchsticks are provided. After lighting the candle, the matchsticks must be removed from the candle.

ARM-BREAK-7 All objects must be placed on the table when the pilot crosses the finish line of the task, otherwise the task is failed.

ARM-BREAK-8 The order in which these subtasks are attempted is not predefined.

4.4.1.4 Comments

- The referee will check the width of the cut piece of foam and verbally confirm correct task execution.

4.4.2 Laundry

4.4.2.1 Introduction

Hanging laundry requires a distinct set of fine motor skills, in particular of the fingers. Also, for an arm prosthesis to be practical for daily use it must be possible to wear standard clothes with it.

In this task, a hooded sweater must be put on and the zipper must be closed. Clothes that are placed on a chair must be hung up on a clothes line by using hangers and blue clothespins. Moreover, two buttons of a blazer must be closed and shoes must be tied.

4.4.2.2 Elements

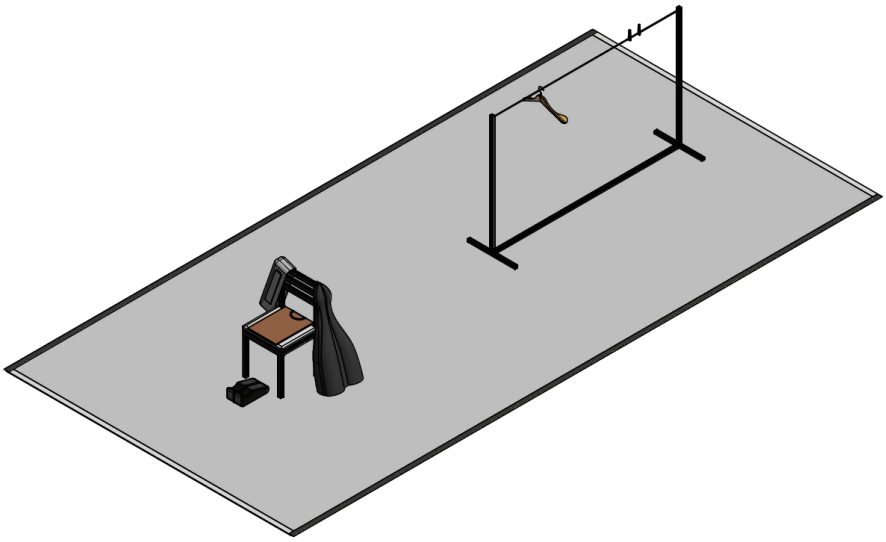

Top: Illustration of task set-up. Bottom: Dimensions of task set-up.

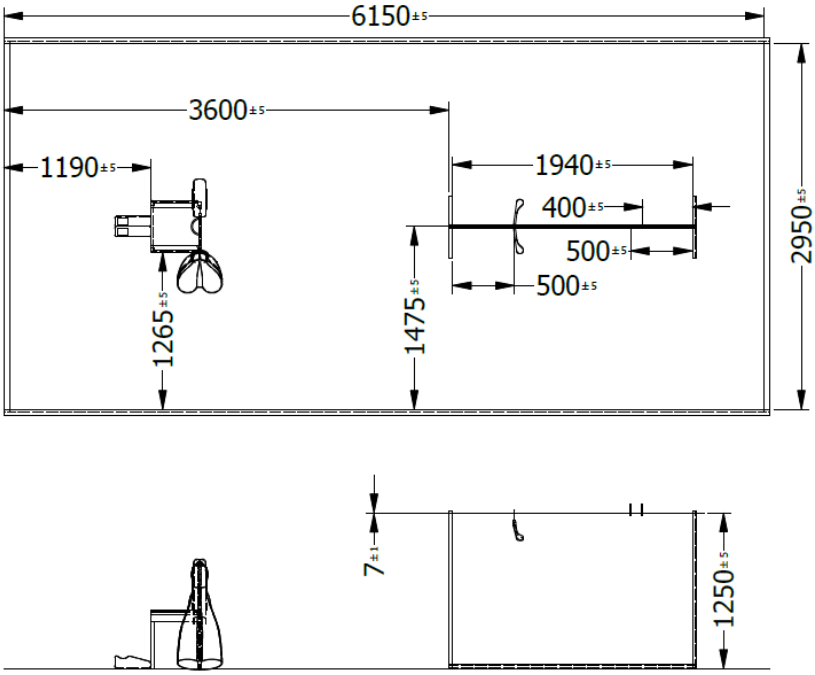

Object	*Photo*	*Specification*	*Brand/Link/Model*
Chair		black wood h: 850 cm w: 420 mm d: 490 mm h_{seat}: 480 mm w_{seat}: 420 mm d_{seat}: 380 mm	IKEA Lerhamn
Blazer with two large buttons		light grey cloth buttons Ø:17 mm buttonholes: 19 mm (stretch)	--
Clothes hanger		Light brown wood w: 430 mm	IKEA Bumerang
T-shirt		brown cloth	Neutral
Hooded sweater with zipper	 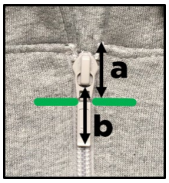	light grey cloth target zone for zipper slider above lines indicated in green (a): ~30 mm zipper slider graspable part (b) : ~30 mm	Neutral (men) Neutral (women)
Two clothespins		blue plastic l: 78 mm	- -

Pair of shoes		Initially, the two laces of each shoe will be tied with a bowknot.	Zalando
Task objects. The depicted objects are not proportional in size.			

4.4.2.3 Task rules

ARM-LAUNDRY-1 The hooded sweater (size provided according to body size of the pilot) must be taken from the chair and put on correctly (i.e. both arms inserted into the sleeves). When wearing the hooded sweater, the zipper must be closed at least to the green mark. When crossing the finish line of the task, the hooded sweater must hang on the clothes line.

ARM-LAUNDRY-2 The two buttons of the blazer must be closed and the blazer must be hung on the clothes line using the hanger. The order of buttoning the blazer and hanging the blazer with the hanger on the clothes line is not predefined.

ARM-LAUNDRY-3 The shirt must be hung on the clothes line and attached with both blue clothespins. It is permitted to put the shirt over the line and then attach it with the blue clothespins.

ARM-LAUNDRY-4 The laces of both shoes must be tied together and the shoes must be hung over the clothes line (to proof that the knot holds).

ARM-LAUNDRY-5 If any object (blazer, hooded sweater, shirt, hanger, shoes or blue clothespins) has fallen off the clothes line passing the finish line of the task, the task is failed.

4.4.2.4 Comment

- The zipper of the hooded sweater is initially completely closed.
- The pilots may use any type of knot to tie the shoe laces.

4.4.3 Clean Sweep

4.4.3.1 Introduction

A vast variety of objects of different shape, size, compliance, texture and weight must be grasped and manipulated in everyday life. The ability to cope with this diversity of requirements is challenged in this task. The objects and related grip types were chosen based on literature and their relevance in daily life. Besides the ability to use different grip types, the ability to maintain grips during postural changes of the wrist/arm and the control of grip force are tested in this task.

In this task, pilots are asked to grasp and move blue objects individually and in a predefined order from their initial position on the table surface to a target position on the neighbouring table.

4.4.3.2 Elements

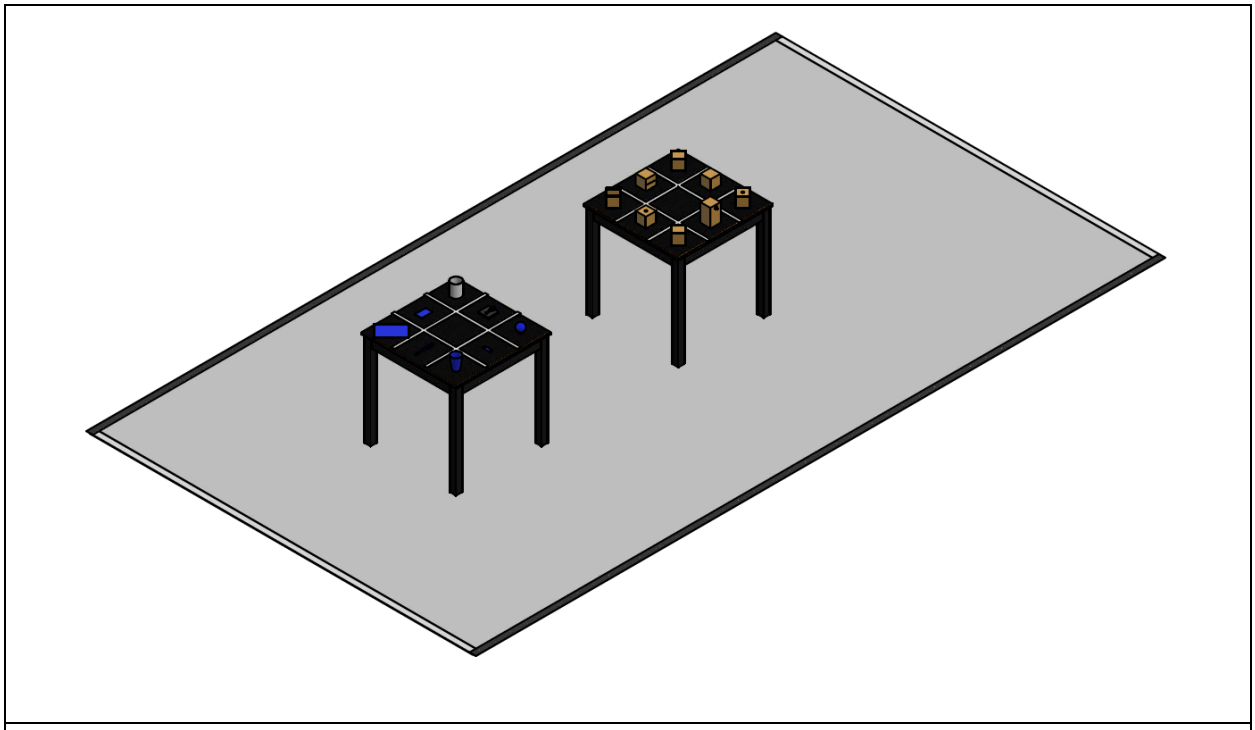

Top: Illustration of task set-up. Bottom left: Detail of initial positions of blue objects, bottom right: Dimensions of task set up.

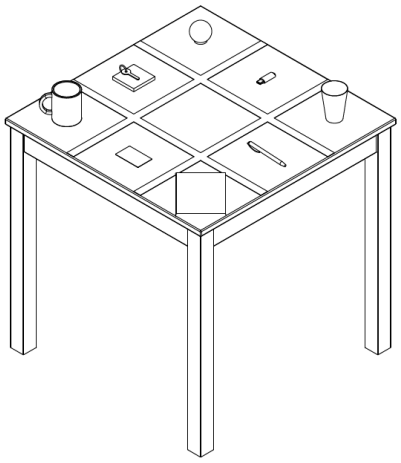

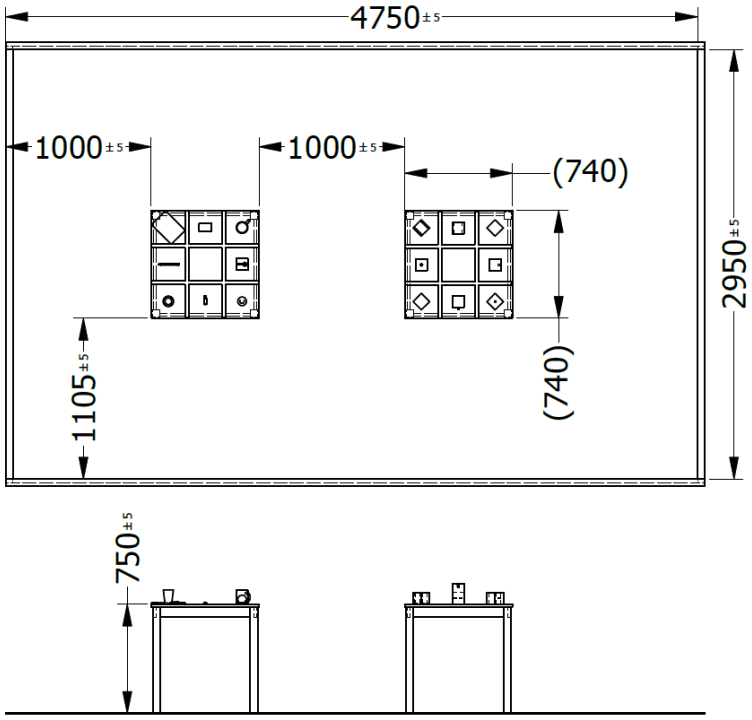

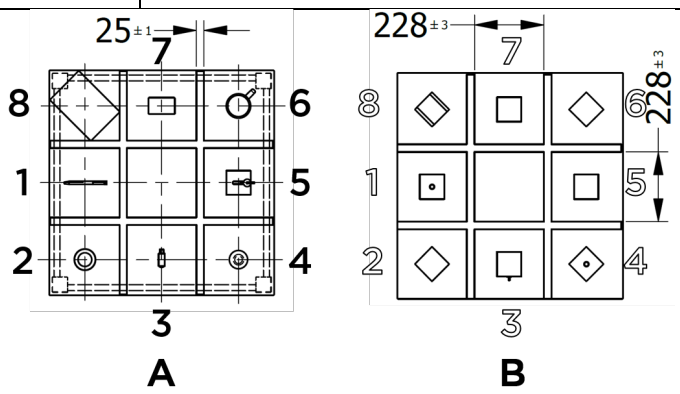

The objects must be grasped and moved from their initial position (filled numbers) on the left table (A) to their target position (outlined numbers) on the right table (B).
1: pen, 2: plastic cup, 3: USB flash drive, 4: foam ball, 5: key and key ring, 6: coffee mug, 7: credit card, 8: DVD case

Object	*Photo*	*Specification*	*Brand/Link/Model*
Pen		blue plastic smooth **w:** 12 g l: 137 mm Ø: 10 mm	Prodir
Plastic cup	 The cup is filled with wooden marbles of 12 mm diameter.	blue plastic smooth with grooves w_{empty}: 3 g w_{filled}: 80 g h: 81 mm $Ø_{half\ height}$: 54 mm	Cup: Ordeno
USB flash drive		blue aluminium smooth w: 7 g 55x17x8 mm	Hama
Foam ball		blue foam smooth w: 23 g Ø: 60 mm	--
Key and key ring		blue w: 17 g Key: steel, smooth l: 55 mm $Ø_{bow}$: 23 mm thickness: 2.5 mm Ring: Steel, smooth $Ø_{outer}$: 22 mm $Ø_{inner}$: 25 mm	--
Coffee mug	 The mug is filled with wooden marbles of 12 mm diameter	blue handle ceramic smooth w_{empty}: 280 g w_{filled}: 400 g h: 80 mm	Mug: IKEA Vardagen
Credit card		blue plastic smooth w: 5 g 85x54x0.8 mm (standard size)	

Object	*Photo*	*Specification*	*Brand/Link/Model*
DVD case		blue plastic smooth w: 90 g 190x135x14.6 mm (standard size)	
Task objects. The depicted objects are not proportional in size.			

4.4.3.3 Task rules

ARM-CLEAN-1 All blue objects must be moved from their initial position on table A to their respective target position on table B. The objects must be manipulated in the following order:

1. The pen must be inserted into the holder.
2. The plastic cup must be placed on the cube. If any of the marbles drops out of the plastic cup, the task is failed.
3. The USB flash drive must be fully inserted into the socket.
4. The rubber ball must be placed on the cube.
5. The key must be hung on the hook using the key ring.
6. The coffee mug must be placed on the cube. If any of the marbles drops out of the coffee mug, the task is failed.
7. The credit card must be fully inserted into the card slot.
8. The DVD case must be placed upright in the shelf.

ARM-CLEAN-2 It is allowed to stabilize the target position on the table using the non-prosthetic hand but it is not allowed to intentionally move or lift the target position off the table surface.

ARM-CLEAN-3 It is not allowed to carry multiple objects at the same time (e.g. by stacking).

ARM-CLEAN-4 All objects must be located at their designated target position on table B when passing the finish line of the task. Otherwise the task is failed.

4.4.4 Home Improvement

4.4.4.1 Introduction

The use of hand tools often involves vibrations and significant peak forces. Prosthetic hands must be able to cope with these requirements as the ability to use tools is critical to complete maintenance work at home such as driving in a nail or exchanging a light bulb

In this task, various tools and objects (mostly blue objects) must be used to complete crafting tasks.

4.4.4.2 Elements

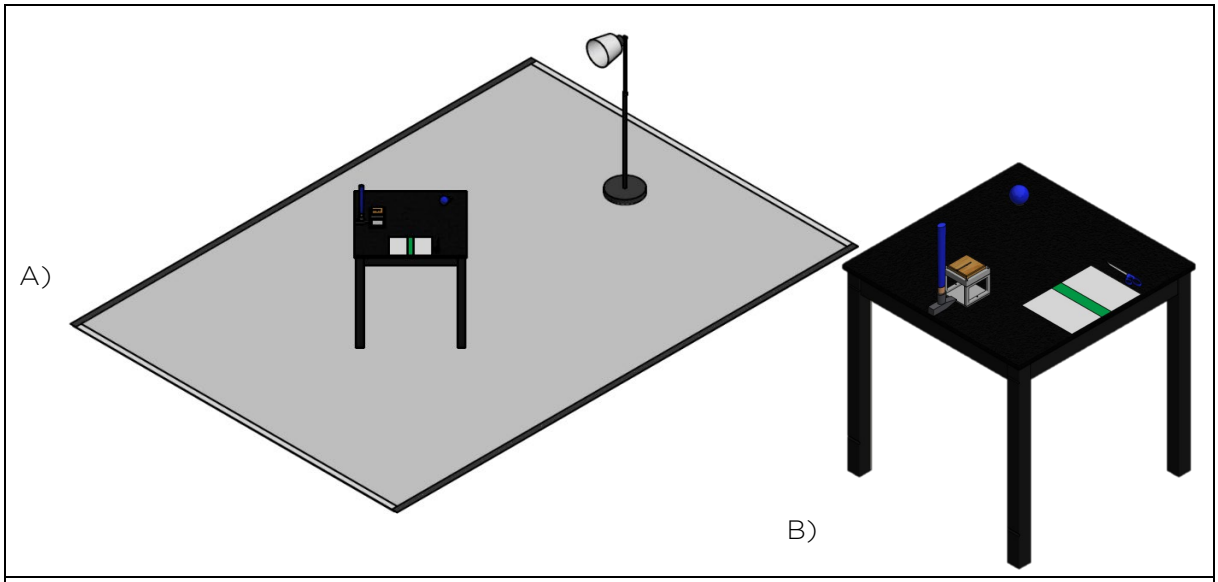

Top: Illustration of task set-up. The detail (right picture) shows the initial set-up of the subtasks. Bottom: Dimensions of task set-up.

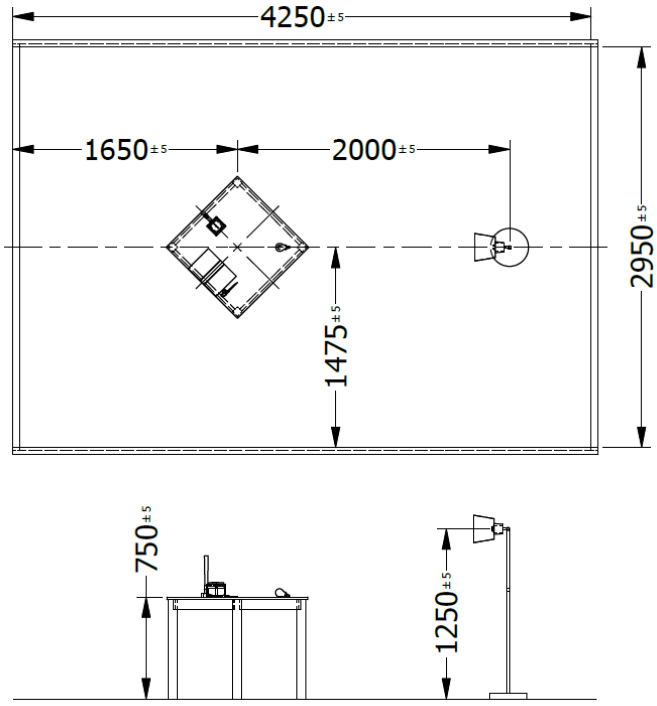

Object	*Photo*	*Specification*	*Brand/Model/ Link*
Scissor		blue handle plastic/steel w: 64 g l_{total}: 201 mm	Westscott Easy Grip Version for left or right hand use will be provided, depending on the side of the prosthesis.
Sheet of paper	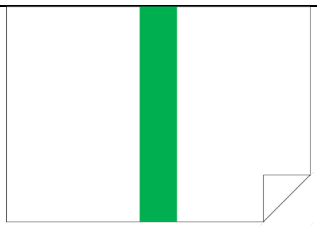	white paper 300 g/m² DIN A4 (297x210 mm) Green Area is 40x210 mm	--
Light bulb		blue glass/metal w: 33 g Ø: 60 mm h: 106 mm	Conrad
Hammer	 Cross sections Handle 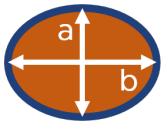 Head 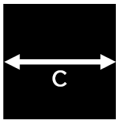	blue handle wood (handle)/ steel (head) w: 450 g l_{total}: 300 mm l_{blue}: 215 mm a: ~21 mm b: ~29 mm c: 23 mm	OBI
Nail		silver steel w: 7 g l: 90 mm Ø: 3.5 mm	--

Object	*Photo*	*Specification*	*Brand/Model/ Link*
Wooden plate	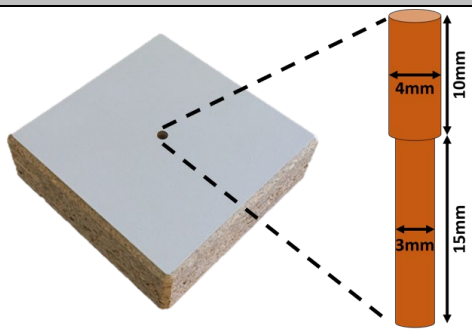	veneered particle board 80x80x25 mm The plate is predrilled 10 mm deep with a diameter of 4 mm such that the nail can be inserted and does not have to be held with the other hand. The remaining 15 mm are predrilled with diameter 3 mm to guide the nail.	--
Floor lamp	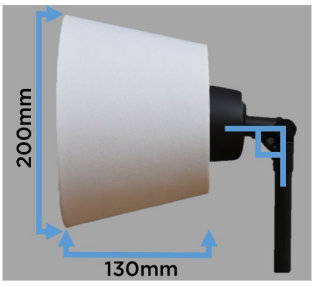	Lamp: Metal, black Shade: cloth, white The angle between the lampshade and the pole is fixed at 90° and cannot be changed. The beginning of the thread can be highlighted.	Lamp: IKEA Skurup Shade: Micasa
Task objects. The depicted objects are not proportional in size.			

4.4.4.3 Task rules

ARM-HOME-1 The nail must be driven into the wood using the blue hammer until its tip breaks the bottom surface of the wood.

ARM-HOME-2 The paper must be cut into two pieces within the green area using the blue scissors. The cut must be made by operating (i.e. opening and closing) the blue scissors. Intentional 'slitting' is not allowed.

ARM-HOME-3 The blue lightbulb must light up after it is screwed into the bulb holder. If the blue lightbulb breaks into pieces, the task is failed.

4.4.4.4 Comments

- The referee verbally confirms when the nail is driven far enough into the wood.
- It is only allowed to operate (i.e. open and close) the scissor using exclusively the prosthetic hand. Thus, it is not allowed to assist actuation using other objects of the task (e.g. the nail, table etc.).
- It is not allowed to grasp and move or tilt the lamp or its pole sidewards to support screwing in the light bulb. It is however allowed to grasp the lamp shade with the non-prosthetic hand to stabilize the lamp.

4.4.5 Haptic Box

4.4.5.1 Introduction

The availability of sensory feedback from the arm prosthesis may help to improve motor control of the prosthetic hand, and to improve acceptance and embodiment of the device.

In this task, objects of specific shape, texture and compliance must be identified in absence of any visual information. The pilots can only rely on sensory feedback from the prosthesis (e.g. sounds, vibrations at the socket, haptic feedback from the terminal device) to solve the task.

The pilots are presented with six boxes which are identical in appearance. Inside each of the boxes a single object is attached to the bottom of the box. The pilots can reach into the box with their prosthetic hand to explore the object that is placed inside, but have no sight of their workspace during task execution (i.e. during object exploration and identification). The objects are presented in a random order and each of the six objects appears only once. Once the object inside the box is identified, the pilots place the matching object in front of that box. By opening the hatch of each box pilots can verify if the object placed in front of the box matches the object inside the box. The task is solved if the six objects have been correctly matched. If any object does not match, the task is failed.

4.4.5.2 Elements

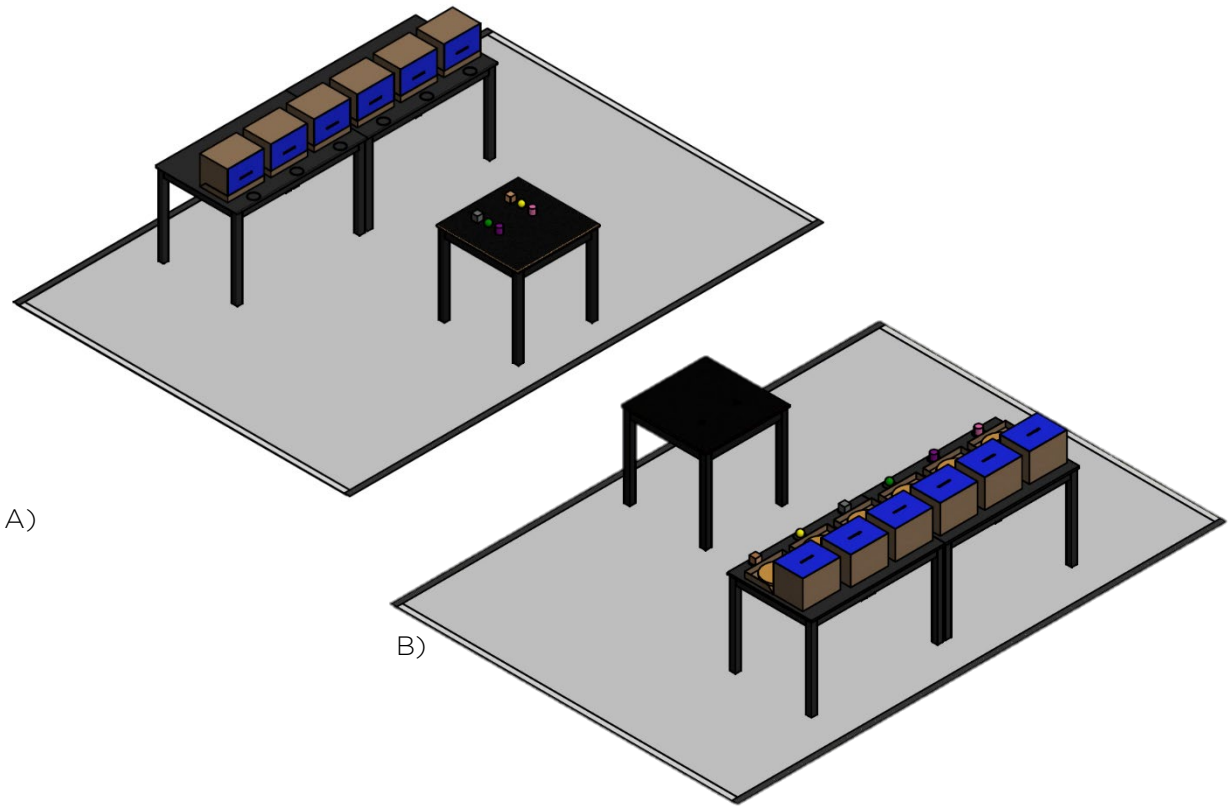

Top: Illustration of task set-up. Dimensions of the task set-up will be provided at a later stage. Tables are IKEA Lerhamn (small, large).

Objects must be identified by haptic exploration inside each haptic box without visual feedback. Matching objects are taken from the table located opposite the boxes and placed in front of the box. A) Initial position: all hatches are closed and matching objects are located on the table opposite the haptic boxes, B) final position: objects are placed in front of the haptic boxes and hatches are opened.

Inside each box, one of the six objects is mounted along the edge of a wooden disc. The actual position of the object along the edge is random.

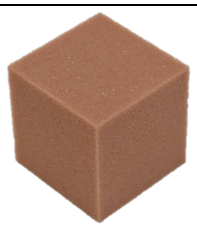			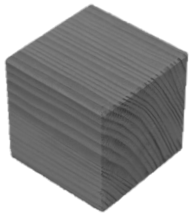	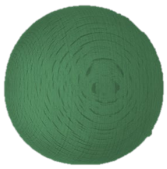	
Foam cube	Foam ball	Foam cylinder	Wooden cube	Wooden ball	Wooden cylinder

Top: Pictures of the six objects that must be identified. Edge length/diameter of the objects is 60±5 mm.
Bottom: Dimensions of task set-up. Left: single box, right: layout of tables, boxes and small objects

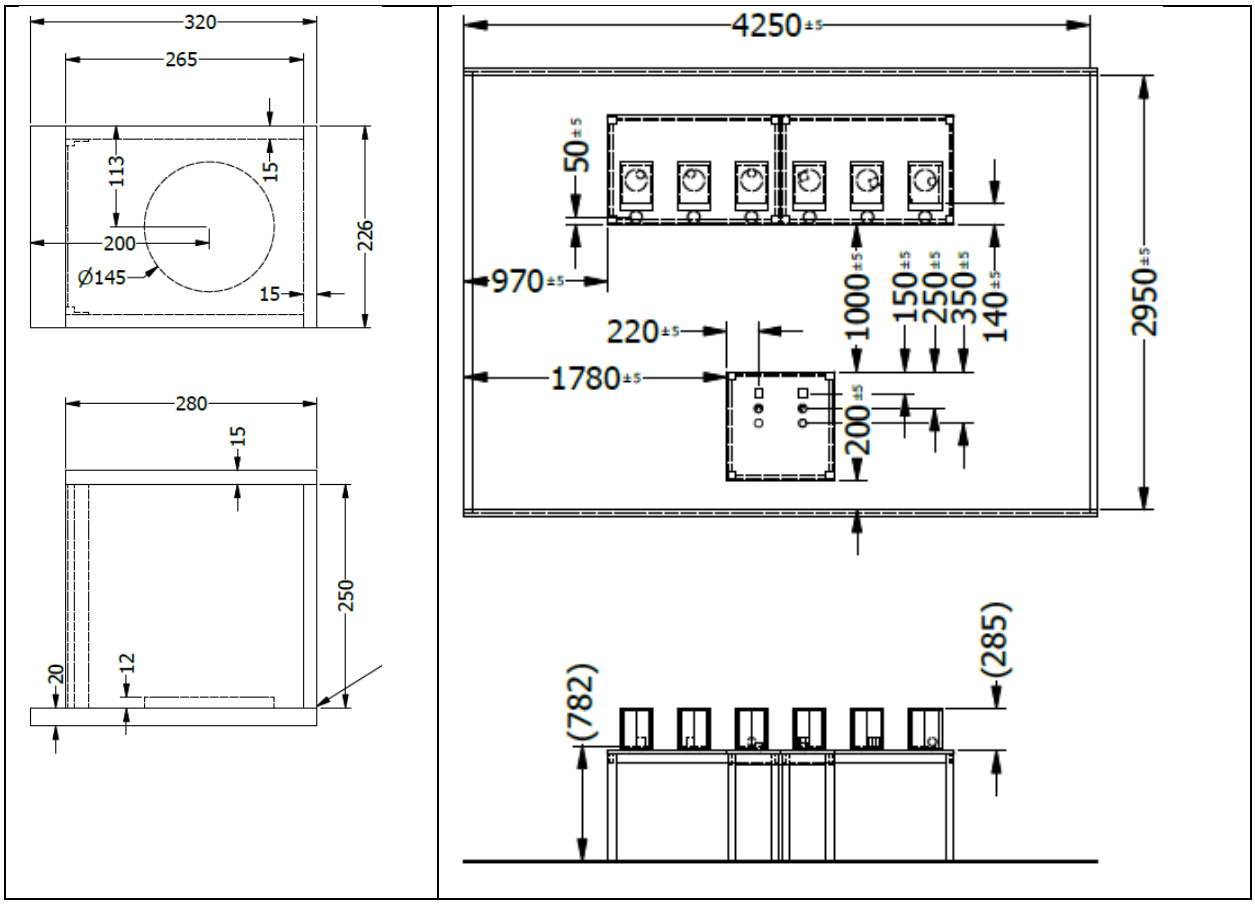

4.4.5.3 Task rules

ARM-BOX-1 Only the prosthetic hand must be inserted into the box through the blue opening.

ARM-BOX-2 Pilots are not allowed to obtain visual information from within the box (e.g. by looking into the box or by attaching a camera to the prosthesis).

ARM-BOX-3 A hatch that has been opened once must not be closed again.

ARM-BOX-4 After opening the hatch of a box, it is not allowed to exchange objects.

4.4.5.3.1 Comment

- Each hatch may be opened individually once an object from the table has been placed in front of the respective box.
- The boxes may be stabilized using the non-prosthetic hand such that they do not slip on the table (e.g. by placing the non-prosthetic hand on top of the box).

4.4.6 Stacking

4.4.6.1 Introduction

Maintenance of a tight grip during postural changes of the arm (e.g. pronation and supination of the forearm, elbow flexion and extension) can be challenging for prosthetic hand users, but is relevant in many situations in daily life.

In this task the pilots must stack blue cups to a vertical pyramid.

4.4.6.2 Elements

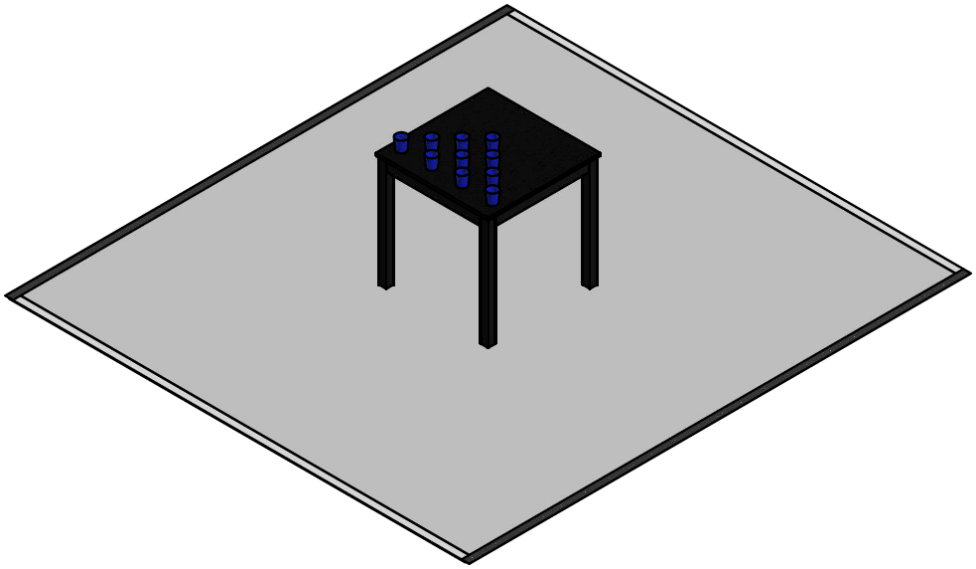

Top: Illustration of task set-up, table is IKEA Lerhamn. Bottom: A) initial position of the blue cups, B) blue cups built up to a vertical pyramid. Cups are IKEA Kalas. Right: Dimensions of task set-up.

A)

B)

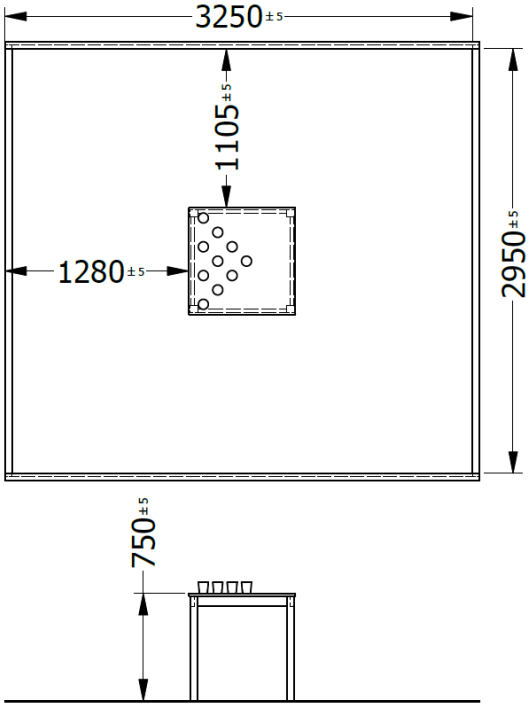

	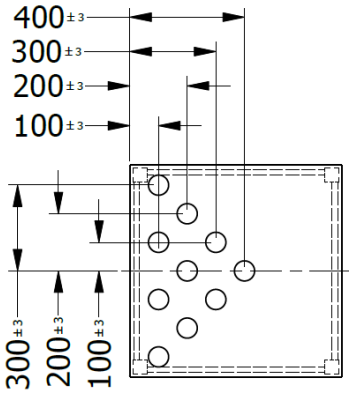

4.4.6.3 Task rules

ARM-STACK-1 If the lateral surface of any blue cup touches the table or floor (e.g. after it drops) the task is failed.

ARM-STACK-2 In the vertically stacked pyramid, the opening of all blue cups must face downward.

ARM-STACK-3 All blue cups must be stacked in a four level vertical pyramid (4-3-2-1) on the table when passing the finish line of the task. Otherwise the task is failed.

4.4.6.3.1 Comment

- It is not considered a task fail if a blue cup falls on the table or floor and by chance stops still on its opening or floor without tipping over.
- If a pilot uses two arm prostheses, it is not allowed to manipulate the blue cups with both prostheses at the same time.

4.5 Competition mode and scoring system

See also sections *1.3* and *1.4.*

Time limit: 8 min

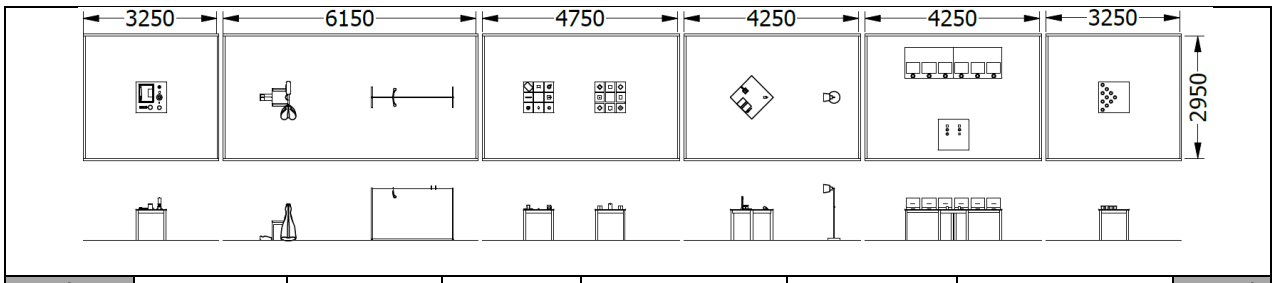

Task	Breakfast	Laundry	Clean Sweep	Home Improvement	Haptic Box	Stacking	Total
Points	14	15	16	17	20	18	100

5. Powered Leg Prosthesis Race

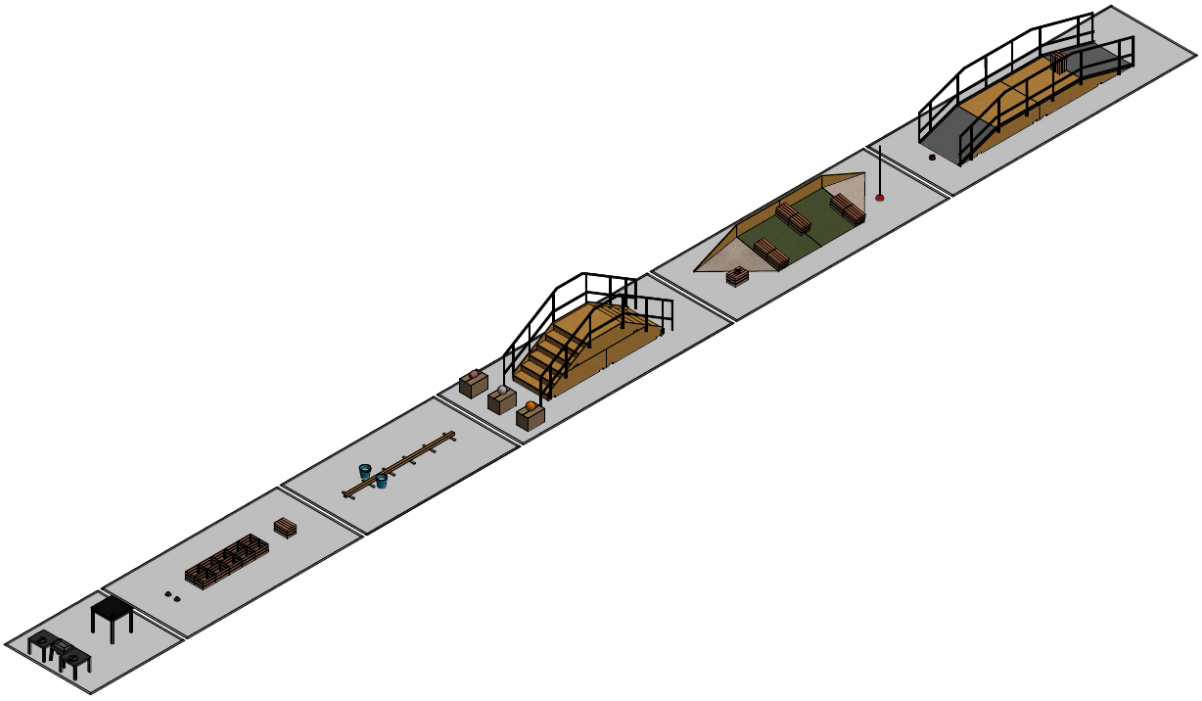

Overview of the Powered Leg Prosthesis Race tasks.

5.1 Introduction

Pilots with transfemoral or knee exarticulation amputations equipped with exoprosthetic devices (leg prostheses) are challenged by tasks related to daily life activities. Bipedal gait is a highly automated movement and during the majority of the time spent walking, secondary tasks involving the upper limbs are carried out. Therefore, pilots must carry or balance objects with their hands while performing the tasks of the Leg Prosthesis Race.

The goal is to solve six different tasks within the race time limit.

5.2 Inclusion criteria

5.2.1 Pilots

In addition to the general inclusion criteria described in section 1.1, pilots must fulfil the following criteria to be eligible for participation:

- Knee exarticulation or more proximal amputation of at least one leg.

5.2.2 Technology

In addition to the general rules described in section 1.2, the following criteria apply for the powered leg prosthesis technology:

- Any kind of passive (unpowered or controlled dissipative) or active prostheses are allowed.
- The prosthetic device can have any number of actively driven, i.e. powered, joints. The residual body parts can also be instrumented and electronically and/or mechanically connected to the prosthesis.
- Load transfer to the ground via wheels is not allowed.
- There is no weight limitation.
- The use of any type of walking aid (e.g. crutches, canes or similar) is not permitted.

5.3 Specific rules

LEG-1	Pilots are not allowed to use items such as trailers, backpacks, bags, pockets, ropes or their clothes to carry objects of the race track (e.g. tools, plates, and bags of the tasks), but it is allowed to use such aids to carry components of the device (e.g. batteries, control units, tools, replacement equipment, etc.).
LEG-2	Touching the ground on (or beyond) the lines coloured in red in the following illustrations with any part of the prosthetic device or other body part is not allowed.
LEG-3	Pilots are not allowed to enter, exit or step on the obstacles in a location coloured in red in the following illustrations.
LEG-4	Any object on the racetrack that is red is not allowed to be touched with any part of the prosthetic device or any other body part.
LEG-5	It is allowed to touch the prosthesis with the hands or any other body part to support movements.
LEG-6	It is allowed to use the handrails.

5.4 Task description

Each task is described in the following sections. In all of the following figures, the direction of the race is (bottom) left to (top) right.

5.4.1 Sit & Stand

5.4.1.1 Introduction

Sitting down and standing up are challenging tasks when wearing a lower-limb prosthesis with an artificial knee joint as joint moments need to be generated or compensated for to enable getting up and control sitting down.

In this task, pilots must sit down and stand up from a stool while balancing objects in their hands. When sitting down and standing up, both feet must be placed in a confined space, such as when sitting in a narrow train compartment.

5.4.1.2 Elements

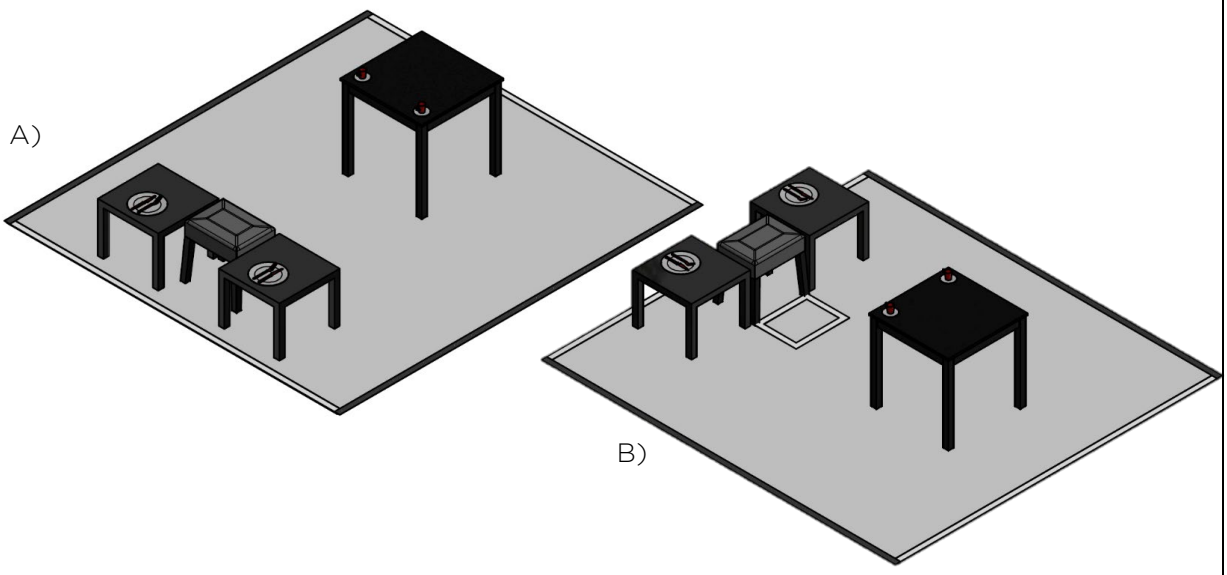

Top: Illustration of task set-up. B) shows the area on the ground in which the feet must be placed while sitting down and standing up, B) is rotated 90° with respect to A).

Stool is IKEA Sakarias, table is IKEA Lerhamn, and side tables are IKEA Lack.

Right: Dimensions of task set-up.

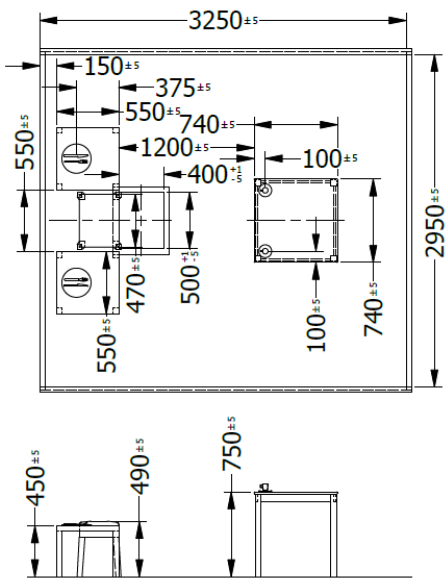

Object	*Photo*	*Specification*	*Brand/Link/Model*
Cups and saucers		Cup: red h: 60 mm Saucer: White Ø: 110 mm Stoneware	*IKEA Vardagen*
Plates and cutlery		Plate: Ø: 210 mm white Cutlery: red Stainless steel	*IKEA Vardagen* *IKEA 365+*
Task objects. The depicted objects are not proportional in size			

5.4.1.3 Task rules

LEG-SIT-1 Pilots must carry the tableware initially located on the dining table and place it on the side tables located to the left and the right of the stool.

LEG-SIT-2 Pilots must carry the tableware initially located on the side tables and place it on the dining table.

LEG-SIT-3 Pilots must carry the tableware while sitting down and standing up. Pilots are only allowed to exchange the tableware on the side tables while sitting on the stool.

LEG-SIT-4 Pilots must sit down completely, i.e. with the full body weight.

LEG-SIT-5 While sitting down on and standing up from the stool, both feet must touch the ground (in their entirety) in the designated area in front of the stool.

LEG-SIT-6 Any red part of the tableware is not allowed to be touched by the pilots. Stacking of tableware is not allowed.

5.4.1.4 Comment

- Lifting the feet off the ground while being seated (e.g. due to body size) is allowed.

5.4.2 Hurdles

5.4.2.1 Introduction

Sometimes it is necessary to climb over objects that are higher than standard steps of a staircase. These situations often also require the ability to accurately control the positioning of the feet, e.g. when walking in a forest (stepping over branches, roots or stone blocks).

In this task, the pilots must stride through a group of wooden crates while carrying objects in their hands.

5.4.2.2 Elements

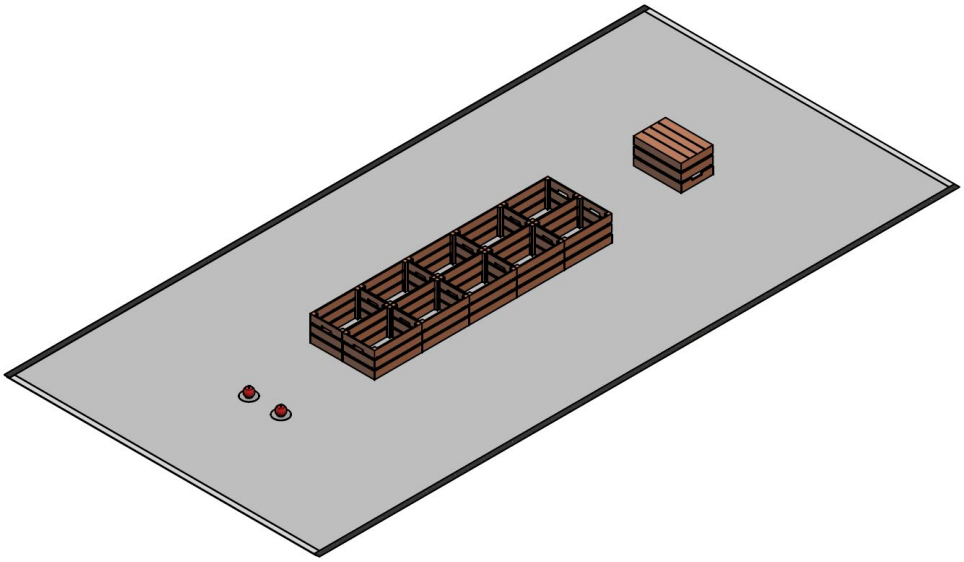

Top: Illustration of task set-up. The group of crates consists of five pairs of crates. Crates are IKEA Knagglig. Bottom: Dimensions of task set-up.

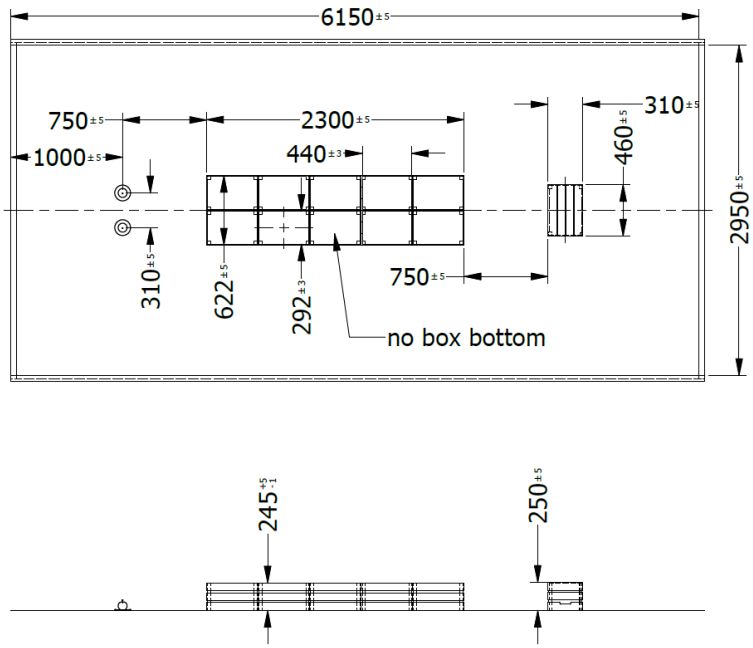

Object	*Photo*	*Specification*	*Brand/Link/Model*
Plate		white stoneware Ø: 140 mm The stems of the apples must face upwards.	IKEA Vardagen
Apple		red plastic Ø: ca. 80 mm	Floristik24
Task objects.			

5.4.2.3 Task rules

LEG-HURDLES-1	Two plates with one red apple each, initially placed on the ground in front of the grouped crates, must be carried to the single crate (defined as target area) on the other side of the grouped crates.
LEG-HURDLES-2	Pilots must place the plates with the red apples on the target area only after they have stepped out of the grouped crates with both legs.
LEG-HURDLES-3	It is only allowed to grasp the plate, but not the red apples. It is only allowed to transport the red apples by balancing them on the plates.
LEG-HURDLES-4	If any of the red apples drops off the plates, the task is failed.
LEG-HURDLES-5	While striding through the grouped crates, pilots must step into at least one crate in each pair of crates.
LEG-HURDLES-6	While striding through the grouped crates, the leading leg must alternate.
LEG-HURDLES-7	Pilots are not allowed to grasp the grouped crates with their hands or any other body part to steady themselves.
LEG-HURDLES-8	It is not allowed to bypass the grouped crates left or right between the start and finish line of the task.

5.4.2.4 Comment

- Incidental touching of the grouped crates with the legs is allowed. However, the task is failed, if any of the crates is moved from its original position (see GR-ARM/LEG/EXO/WHL-12).
- It is considered bypassing the crates when the pilot walks with one leg outside of the crates

5.4.3 Balance Beam

5.4.3.1 Introduction

The ability to maintain dynamic body balance is critical in many situations in daily life, e.g. when climbing on a step or when walking on a very narrow path.

In this task, the pilots have to individually pick up and carry two buckets to a target area while walking across a narrow wooden beam.

5.4.3.2 Elements

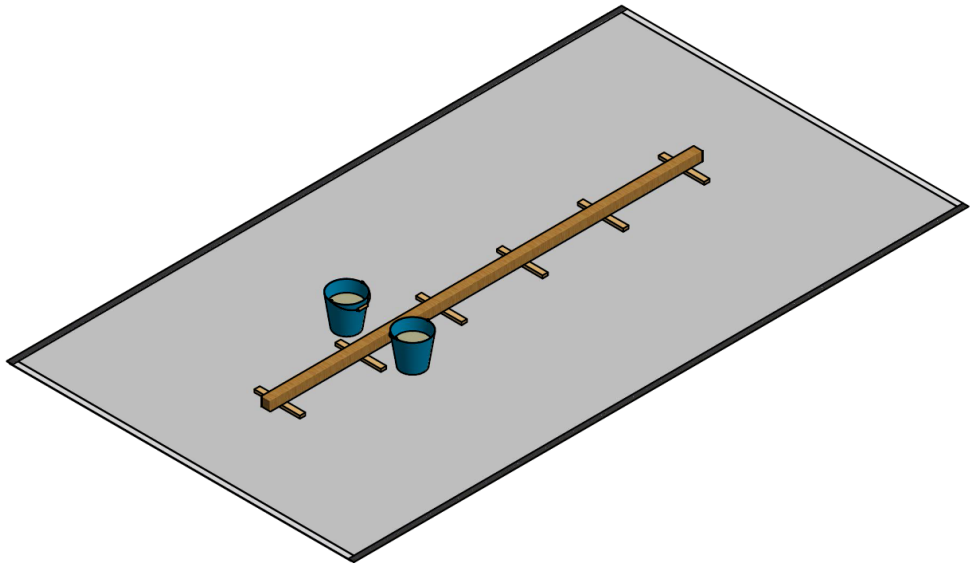

Top: Illustration of task set-up. Bottom: Dimensions of task set-up and definition of start area and target area.

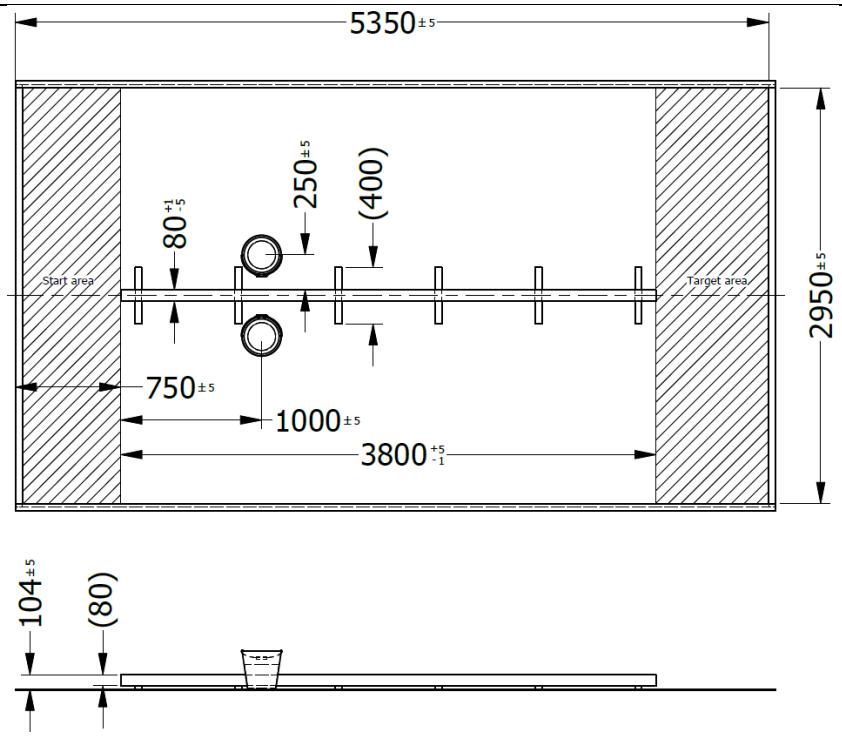

Object	*Photo*	*Specification*	*Brand/Link/Model*
Bucket		black Polypropylen vol: 10.8 l h: 264 mm $weight_{bucket}$: ~300g $weight_{total}$: 7500 g ±75 g Teams fill the buckets to reach the indicated weight (e.g. with sand, soil etc.). Use of bags is recommended to avoid spilling.	Packstar
Task objects.			

5.4.3.3 Task rules

LEG-BALANCE-1 The pilots' feet are only allowed to touch the ground in the area between the start line of the task and the beginning of the beam (defined as start area) and in the area between the end of the beam and the finish line of the task (defined as the target area).

LEG-BALANCE-2 Both buckets must be carried to the target area. Only one bucket must be carried at a time.

LEG-BALANCE-3 Once a bucket is picked up from the initial position, it must only touch the ground again in the target area.

LEG-BALANCE-4 Once a pilot's foot has left the start area, it must only touch the ground again in the target area.

LEG-BALANCE-5 The pilot's feet are only allowed to touch the ground in the target area after both buckets have been placed in the target area.

LEG-BALANCE-6 The contents of the buckets must not be spilled.

LEG-BALANCE-7 It is not allowed to hop with the non-prosthetic leg on the balance beam.

5.4.4 Stairs

5.4.4.1 Introduction

Stairs are very common in daily life. To ascend or descend stairs, transfemoral prostheses users must usually apply specific strategies and adapt their gait pattern to overcome the height difference of the single steps. The resulting movements are often non-physiological and asymmetric, and they can be exhausting and may lead to secondary discomfort (e.g. back pain) in the long run. Handrails are often used as an auxiliary mean. In addition, transfemoral prosthesis users usually rely on visual feedback to control the placement of their feet on the single steps of the stairs due to the lack of proprioceptive feedback from their knee and ankle joints.

In this task pilots must ascend and descend a flight of stairs while carrying several bulky objects.

5.4.4.2 Elements

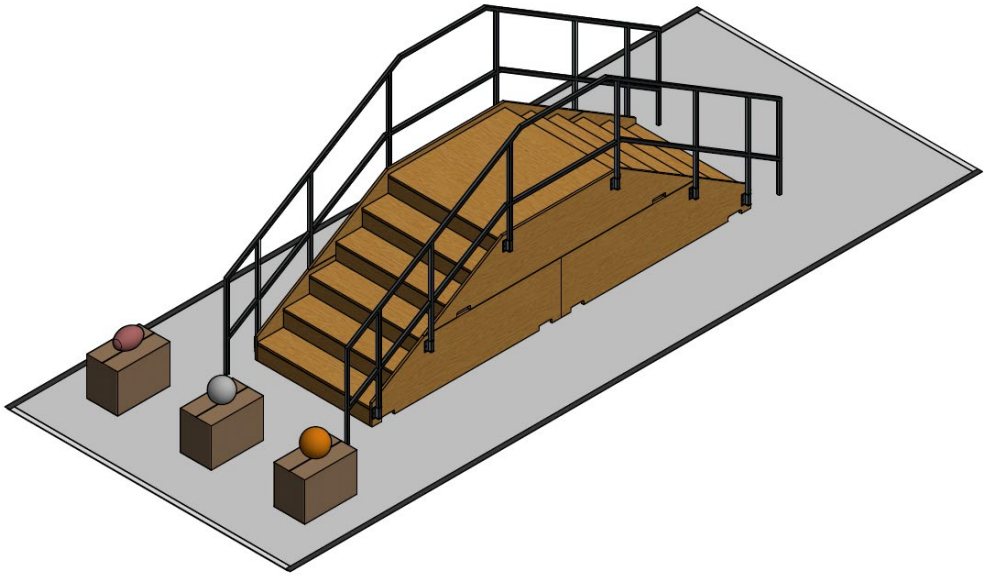

Top: Illustration of task set-up. The boxes and balls must be carried to the other side of the stairs and placed in the target area. Bottom: Dimensions of task set-up.

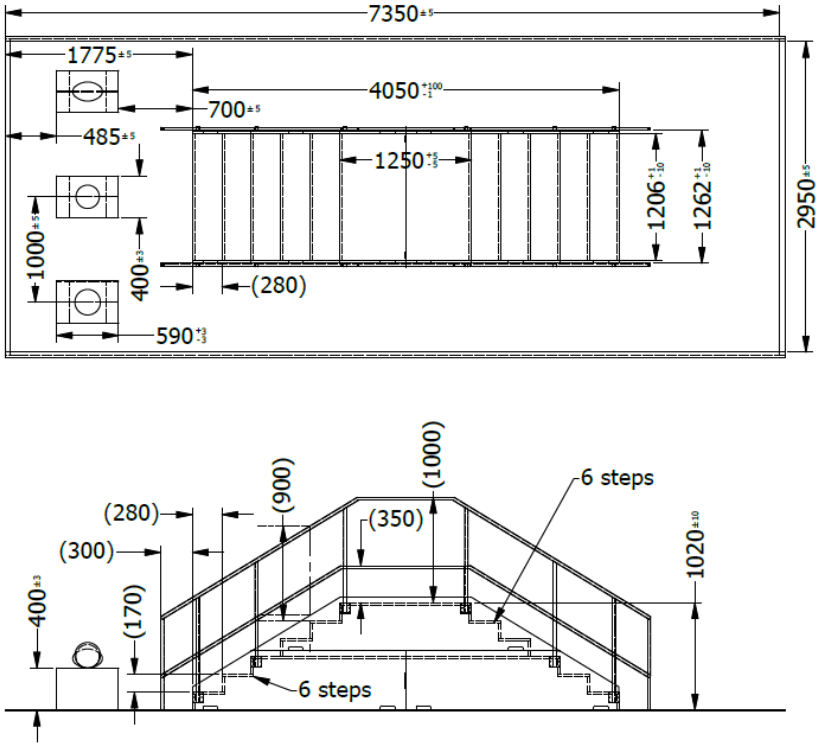

Object	*Photo*	*Specification*	*Brand/Link/Model*
Basketball		orange rubber w: ~500 g Ø: ~222 mm	--
Soccer ball		black/white leather w: ~350 g Ø: 200 mm	--
American football		brown rubber w: ~254 g l: ~280 mm Ø: ~170 mm	--
Cardboard boxes		brown cardboard w: ~900 g 590x400x400 mm	--

Task objects. The depicted objects are not proportional in size.

5.4.4.3 Task rules

LEG-STAIRS-1	The pilots must carry the three cardboard boxes and the three balls to the area between the end of the stairs and the finish line of the task (defined as target area).
LEG-STAIRS-2	Pilots are not allowed to bypass the stairs left or right.
LEG-STAIRS-3	While ascending and descending the stairs, the leading leg must alternate.
LEG-STAIRS-4	Each step must be stepped on with one foot. Pilots are not allowed to place two feet on one step at the same time. Pilots are not allowed to omit single steps or jump over steps.
LEG-STAIRS-5	Pilots are allowed to carry more than one object at the same time.
LEG-STAIRS-6	Pilots are allowed to carry the objects with any part of their body. They are not allowed to throw, kick or push any object.
LEG-STAIRS-7	The cardboard boxes and the balls must be located in target area when the pilot crosses the finish line of the task, otherwise the task is failed.

5.4.5 Tilted Path

5.4.5.1 Introduction

In daily life, the ground is sometimes tilted perpendicular to the walking direction, e.g. when walking on nature trails or across a field. Such tilted paths challenge the ability to control toe clearance of the prosthetic foot. When walking on a tilted path with a transfemoral prosthesis, the level difference is often compensated by excessive hip motion. When walking outside, the type of surface and thus the interaction forces between the foot and the ground can vary depending on the type of surface.

In this task, pilots must walk across a tilted path with while balancing objects in their hands.

5.4.5.2 Elements

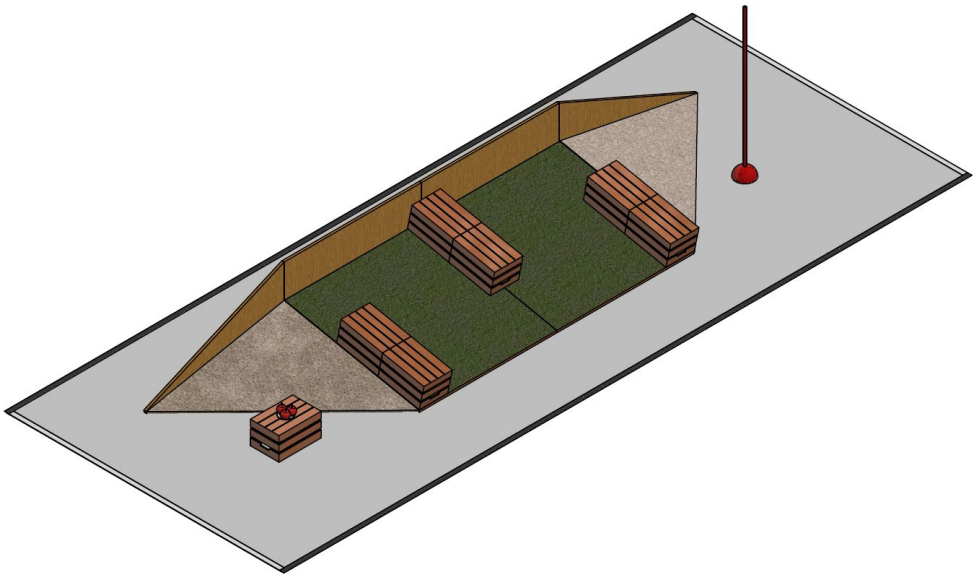

Top: Illustration of task set-up. Bottom: Dimensions of task set-up.

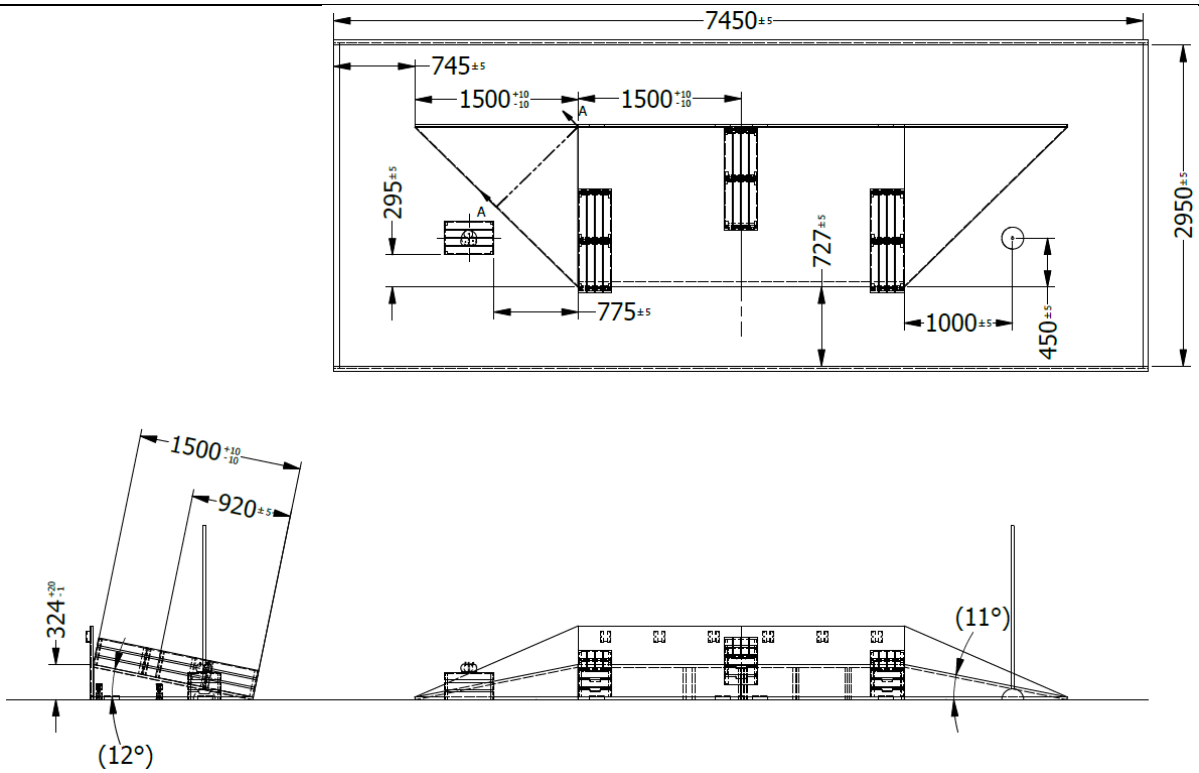

Object	*Photo*	*Specification*	*Brand/Link/Model*
Plate		white stoneware Ø: 140 mm	IKEA Vardagen
Apples		red plastic Ø: ca. 80 mm The stems of the apples must face upwards.	Floristik24
Wooden crate		light brown wood w: 460 mm d: 310 mm h: 250 mm	IKEA Knagglig
Task objects. The depicted objects are not proportional in size.			

5.4.5.3 Task rules

LEG-TILTED-1 Pilots must cross the tilted path, go around the red pole and then cross the tilted path again in the opposite direction.

LEG-TILTED-2 Pilots are not allowed to step over the crates with any leg. They are allowed to touch the crates, but if any of the crates moves, the task is failed.

LEG-TILTED-3 Pilots must enter and exit the obstacle across the grey ramps, i.e. both feet must cross in their entirety the separation line between the grey and the green surfaces.

LEG-TILTED-4 A plate with three red apples, initially placed on a wooden crate, must be carried when crossing the tilted path in both directions. After crossing the tilted path twice, the plate with the red apples must be returned to its initial position on the wooden crate.

LEG-TILTED-5 If any of the red apples drops, the task is failed.

LEG-TILTED-6 It is only allowed to grasp the plate, but not the red apples. It is only allowed to transport the red apples by balancing them on the plate.

5.4.5.4 Comments

- After completing the task (i.e. crossing the tilted path twice and returning the plate with the red apples to the wooden crate), pilots proceed to the finish line of the task of the next task by passing the tilted path on the lower side.

5.4.6 Ramp

5.4.6.1 Introduction

Inclined surfaces such as ramps in front of buildings or as part of a nature path are common in daily life. Climbing and descending ramps requires the ability to maintain body balance while significant moments about the hip and the knee joint in a single leg must be controlled. The characteristics of ramps are outlined in construction standards yet not all ramps in daily life meet these criteria.

In this task, pilots have to ascend and descend steep slopes while balancing objects in their hands.

5.4.6.2 Elements

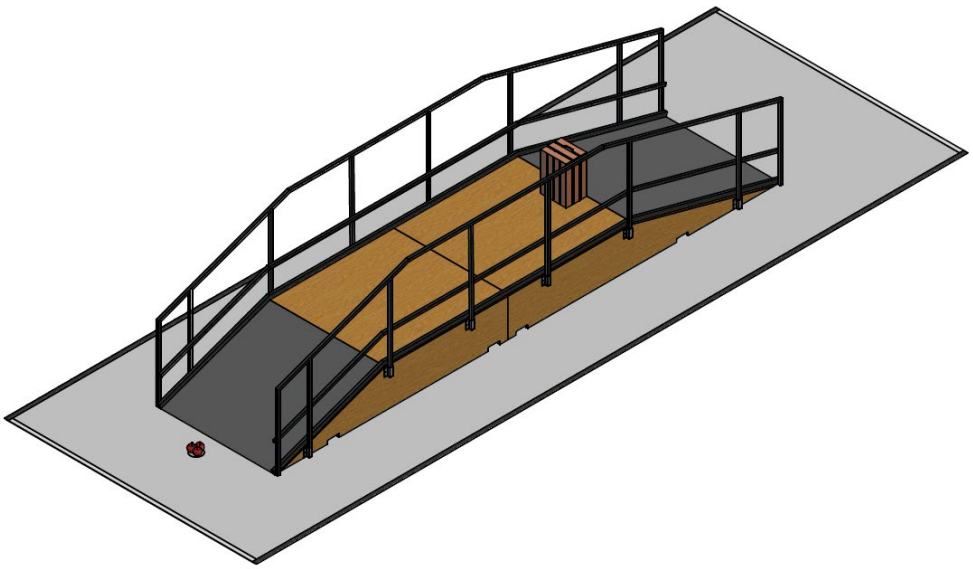

Top: Illustration of task set-up. Bottom: Dimensions of task set-up.

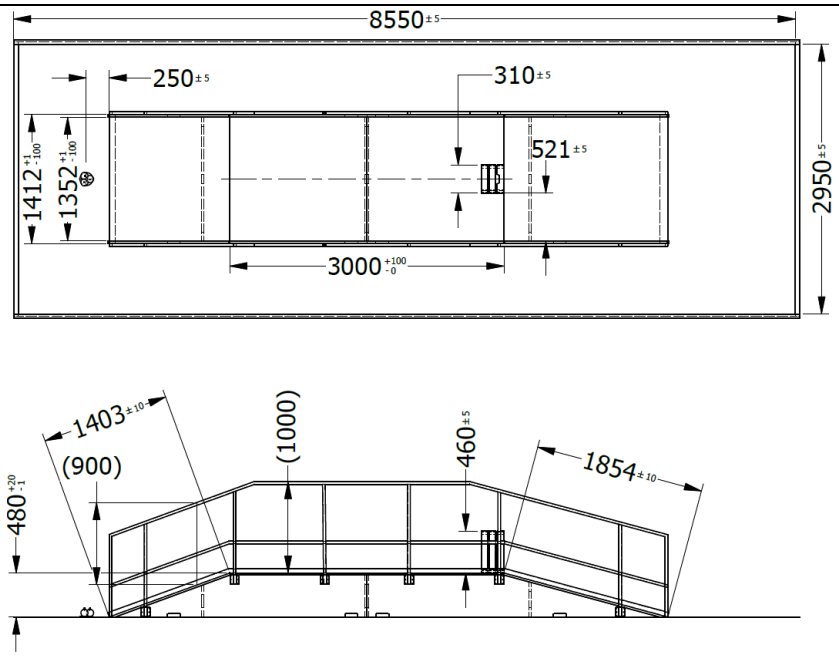

Object	*Photo*	*Specification*	*Brand/Link/Model*
Plate		white stoneware Ø: 140 mm	IKEA Vardagen
Apples		red plastic Ø: ca. 80 mm The stems of the apples must face upwards.	Floristik24
Wooden crate		light brown wood w: 460 mm d: 310 mm h: 250 mm	IKEA Knagglig
Task objects. The depicted objects are not proportional in size.			

5.4.6.3 Task rules

LEG-RAMP-1 The ramp must be ascended on the more inclined slope (20°) and descended on the less inclined slope (15°).

LEG-RAMP-2 A plate with three red apples must be picked up, carried, and placed on a wooden crate located on the horizontal platform of the ramp (defined as target position). If any of the red apples drops, the task is failed.

LEG-RAMP-3 It is only allowed to grasp the plate, but not the red apples. It is only allowed to transport the red apples by balancing them on the plate. If the plate or the red apples are not located at their target position when passing the finish line of the task, the task is failed.

5.5 Competition Mode and Scoring System

See also sections *1.3* and *1.4*.

Time limit: 4 min

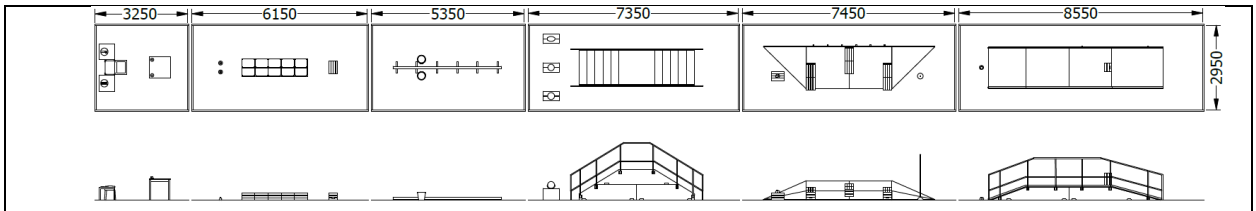

Task	Sit & stand	Hurdles	Balancing Beam	Stairs	Tilted Path	Ramp	Total
Points	15	18	20	17	16	14	100

6. Powered Exoskeleton Race

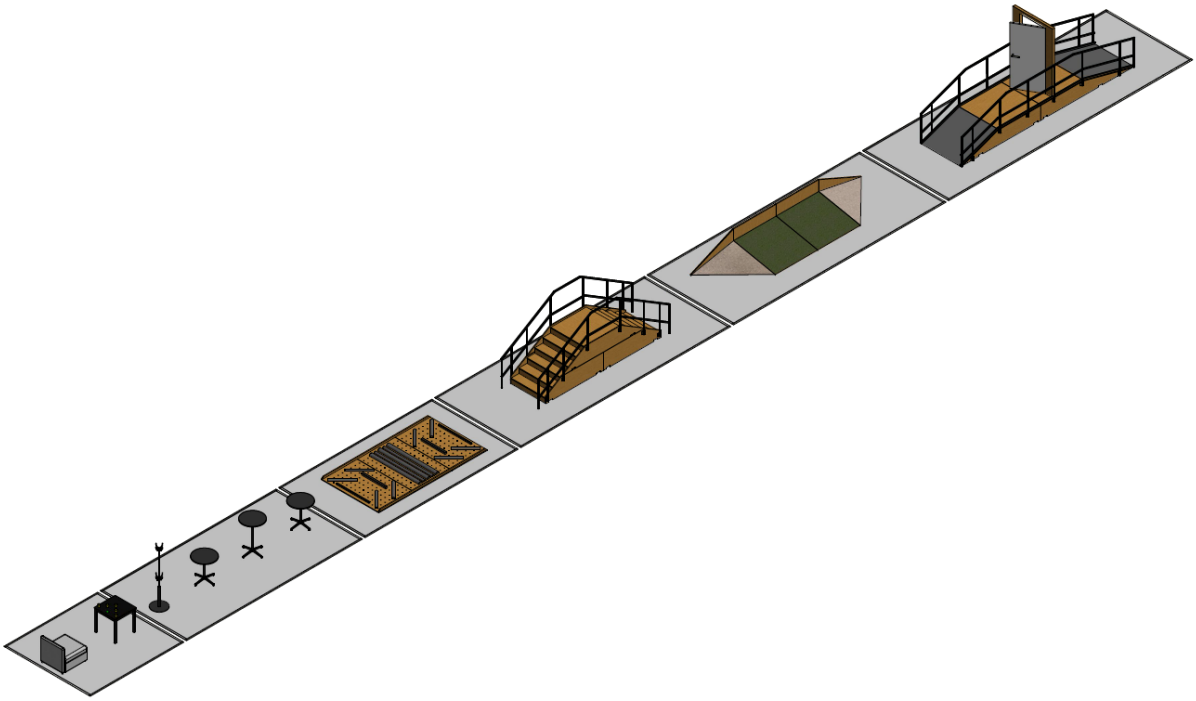

Overview of the Powered Exoskeleton Race tasks.

6.1 Introduction

Pilots with motor complete thoracic or lumbar spinal cord injuries (SCI) are equipped with exoskeletal devices (exoskeletons) and are challenged by tasks related to activities of daily living.

Besides their use in the gait rehabilitation setting to improve ambulatory functions, exoskeletons are a promising alternative to the wheelchair. Positive health related effects, such as improved cardiorespiratory and bowel function, increased bone density, and a reduction of spasticity and pain have been reported from their use. Users also report positive effects on social interaction and psychological benefits.

The goal is to solve six different tasks within the race time limit.

6.2 Inclusion criteria

6.2.1 Pilots

In addition to the general inclusion criteria described in section 1.1, pilots must fulfil the following criteria to be eligible for participation:

- Spinal cord injured pilots with paraplegia and a complete loss of motor function in the lower limbs (AIS A or B, http://www.sci-info-pages.com/levels.html) are included.
- Pilots with lesions affecting the control of trunk, arm and/or neck must be evaluated individually, as they must have sufficient voluntary control and strength to hold crutches and/or stabilise the trunk.
- The lesions can be spastic or non-spastic.

6.2.2 Technology

In addition to the General Rules described in section 1.2 the following criteria apply for the exoskeleton technology:

- Any kind of input device or automated gait intention detection strategy is allowed.
- Load transfer to the ground via wheels or rolling contact is not allowed.
- Any type of actuation (other than combustion) is allowed; also passive devices are allowed (e.g. based on passive springs or cables, which can be used to wind up the system and store kinetic energy).
- The maximum weight of the exoskeletal device (excluding the pilot) is 85 kg.
- Functional electrical stimulation can be added to hybridise the exoskeleton. Surface and implanted stimulation technologies are allowed.
- Crutches or canes are allowed. If crutches or canes are used they must be carried by the pilot during the entire race.

6.3 Specific Rules

EXO-1	Pilots must walk such that during any point in time, at least one of their legs is in contact with the ground, i.e. swing-through gait patterns are not allowed.
EXO-2	Touching the ground on (or beyond) the areas coloured in red in the following illustrations with any part of the body or device, except the crutches, is not allowed.
EXO-3	Wearing a helmet is mandatory. The teams are required to provide their own helmet.
EXO-4	Use of the handrails is allowed.

6.4 Task description

Each task is described in the following sections. In all of the following figures, the direction of the race is (bottom) left to (top) right.

6.4.1 Sit & Stand

6.4.1.1 Introduction

Sitting down and standing up is a general challenge when wearing an exoskeletal device as substantial joint moments about the knee and hip joints are required to get up and sit down in a controlled manner.

When standing in an exoskeletal device crutches are usually used to maintain balance. However, oftentimes it is required to manipulate objects while standing (e.g. at a kitchen counter).

In the first part of this task, pilots have to sit down and stand up from a sofa. In the second part of this task, pilots have to stack cups in a target area while standing next to a table.

6.4.1.2 Elements

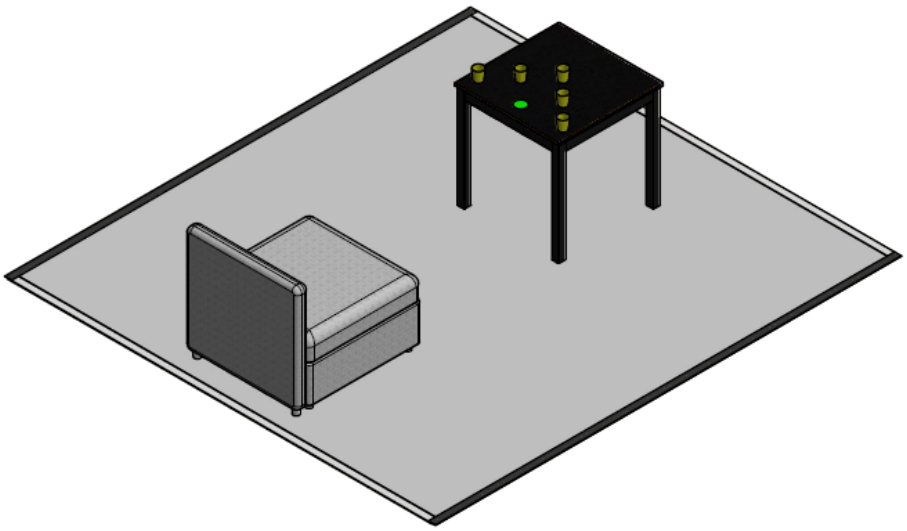

Top: Illustration of task set-up.

Sofa is [IKEA Vallentuna](), table is [IKEA Lerhamn.]()

Right and bottom: Dimensions of task set-up.

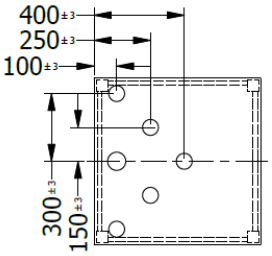

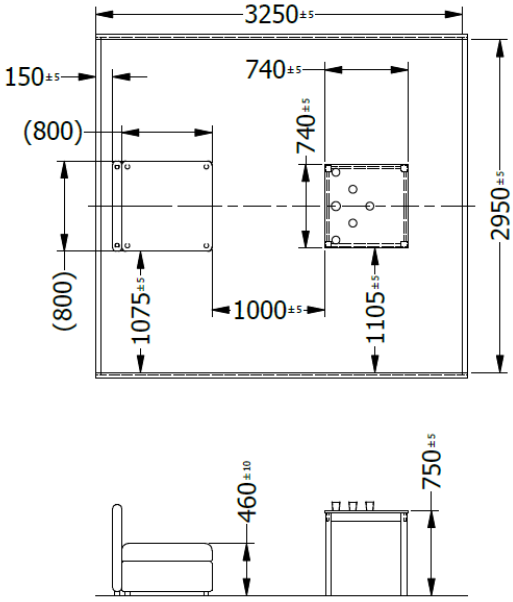

Object	*Photo*	*Specification*	*Brand/Link/Model*
Cups		PP vol.: 23 cl w: 29 g h: 85 mm Yellow cups will be used.	IKEA Kalas
Task objects.			

6.4.1.3 Task rules

EXO-SITSTAND-1 Pilots must sit down and stand up once.

EXO-SITSTAND-2 Pilots must sit down completely, i.e. with their full body weight. The knees and the hips are flexed accordingly and the crutches must be lifted off the ground once while sitting.

EXO-SITSTAND-3 Pilots must stack five cups in the predefined target area on the table. They are free to conduct the stacking task either with one hand or with both. Use of hands, arms and crutches is allowed to stack the cups.

EXO-SITSTAND-4 If the cups are not stacked within the predefined target zone when the pilot crosses the finish line of the task, the task is failed.

6.4.1.4 Comments

- The referee verbally confirms correct execution of sitting down and standing up.
- The table is lightweight and not fixed to the ground.
- If any of the cups of the stacking task drops on the ground pilots are allowed to pick them up.
- Initially, the openings of the cups point upwards. The cups can be stacked with the openings facing up or down.

6.4.2 Slalom

6.4.2.1 Introduction

Often in daily life, it is necessary to navigate around static or moving obstacles in order to avoid collisions or to reach a certain destination.

In this task, pilots have to negotiate a slalom composed of single pieces of furniture.

6.4.2.2 Elements

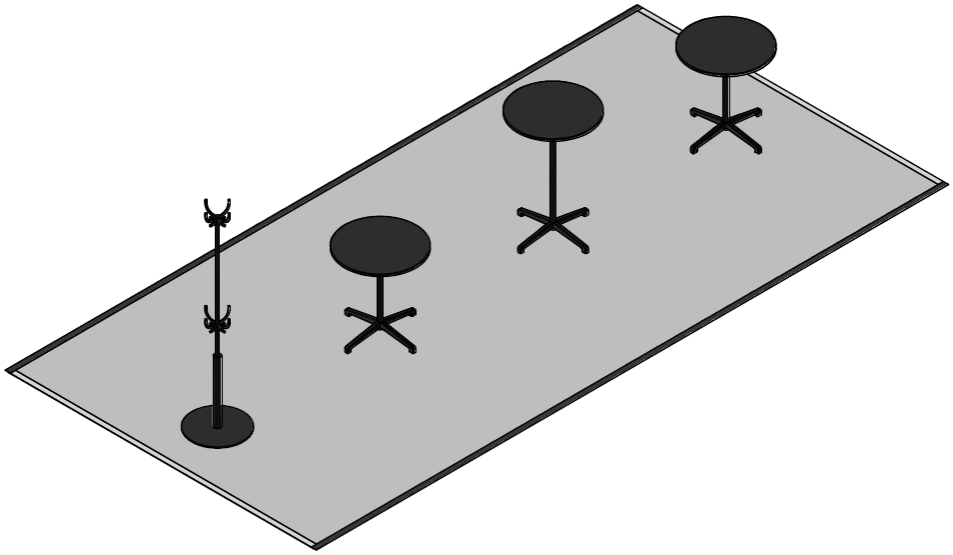

Top: Illustration of task set-up. Coat rack is IKEA Hemnes, tables are IKEA Stensele.
Bottom: Dimensions of task set-up.

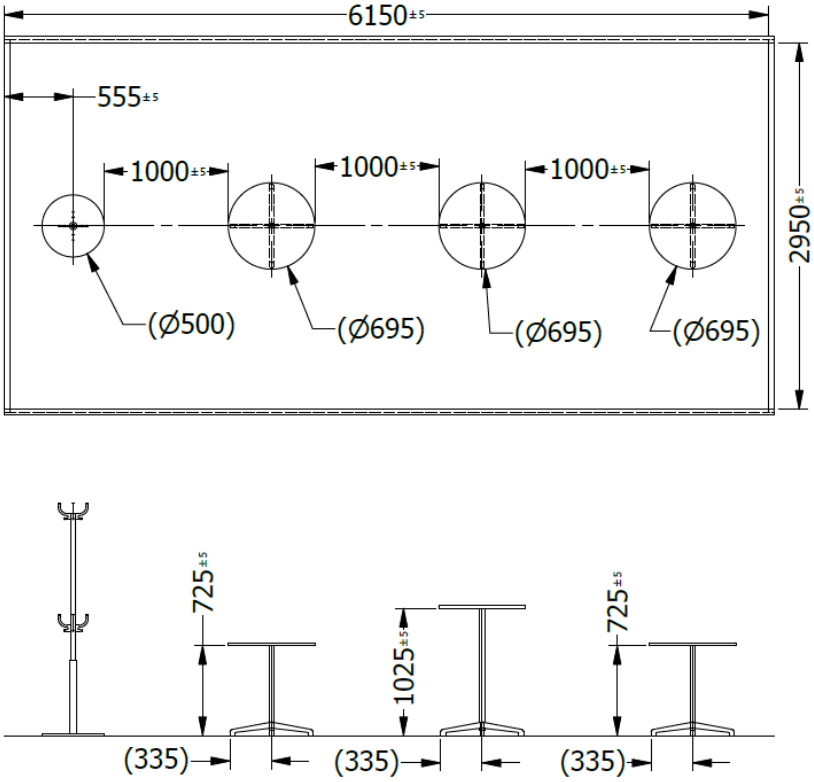

6.4.2.3 Task rules

EXO-SLALOM-1 Two consecutive pieces of furniture are considered a pair. All three pairs must be passed through once.

6.4.2.4 Comment

- To start the task, the first two pieces (i.e. pair) of furniture can be entered from the left or from the right-hand side.

6.4.3 Rough Terrain

6.4.3.1 Introduction

In certain situations in daily life it is required to step over obstacles on the ground and to accurately control the positioning of the feet (e.g. when entering an escalator or stepping over stones or roots).

In this task, the pilots have to negotiate an uneven terrain to test their ability to place the foot in a defined location.

6.4.3.2 Elements

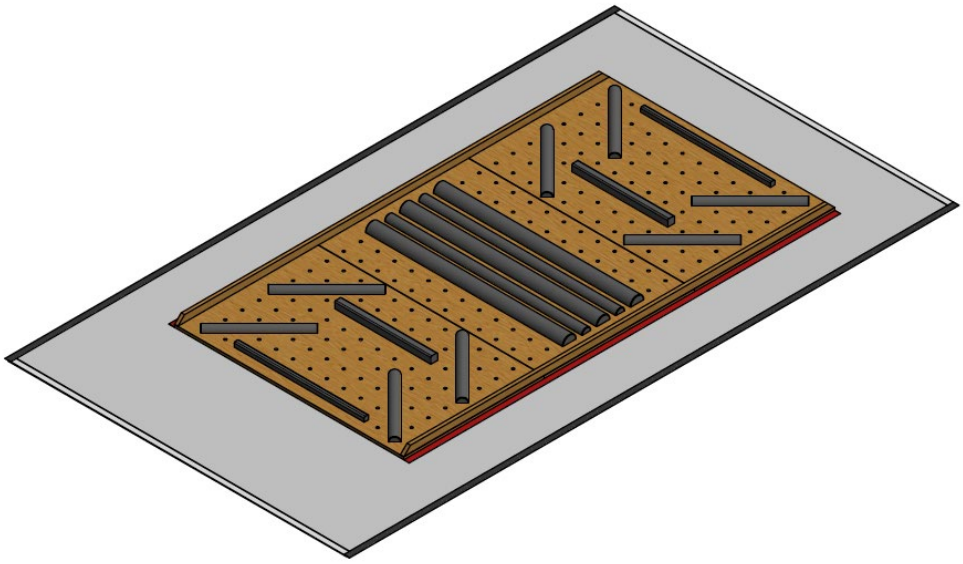

Top: Illustration of task set-up. Bottom: Dimensions of task set-up.

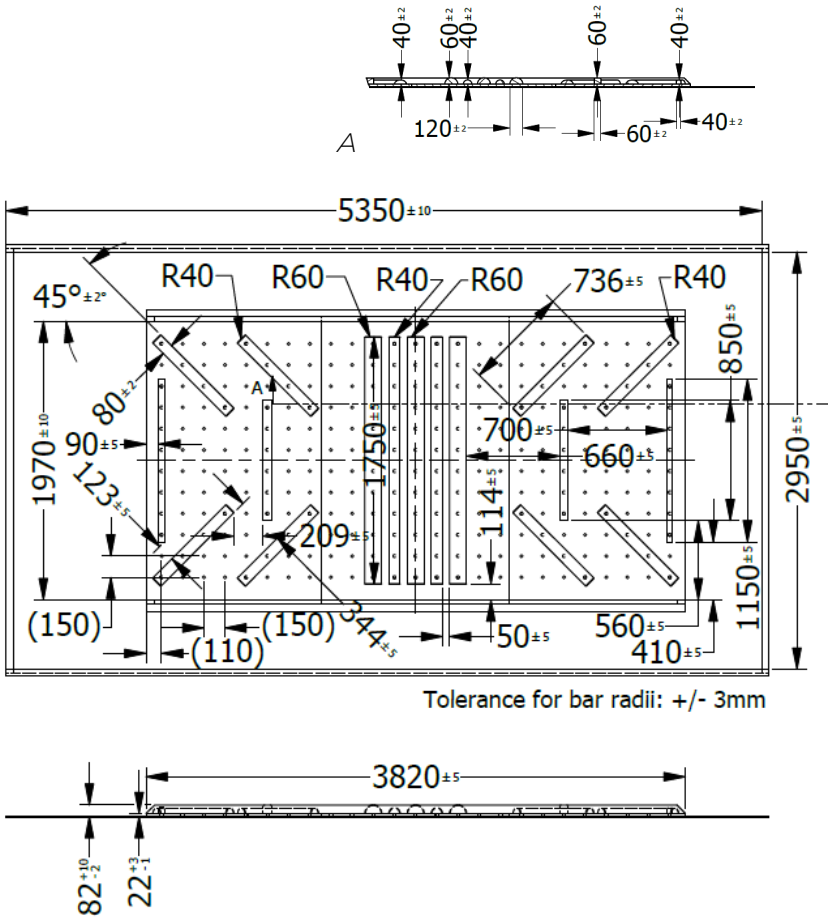

6.4.3.3 Task Rules

EXO-ROUGH-1	Pilots must cross the rough terrain once in direction of the race
EXO-ROUGH-2	Pilots are free to choose their path across the rough terrain.
EXO-ROUGH-3	Crossing the boundaries of the rough terrain on either side is not allowed (i.e. the pilots can only exit at the start and end). Touching the wooden rails placed on each side of the terrain is allowed, but it is not allowed to step on these rails.
EXO-ROUGH-4	The crutches may be placed anywhere on the obstacle (also outside the red lines).

6.4.4 Stairs

6.4.4.1 Introduction

Stairs are very common in daily life yet they are challenging for robotic devices to overcome. Ascending and descending stairs requires precise placement of the feet on the single steps. At the same time, high moments about the knee and the hip joint in a single leg are required to bring the pilot to the next step in a controlled manner.

In this task pilots have to ascend and descend a flight of stairs.

6.4.4.2 Elements

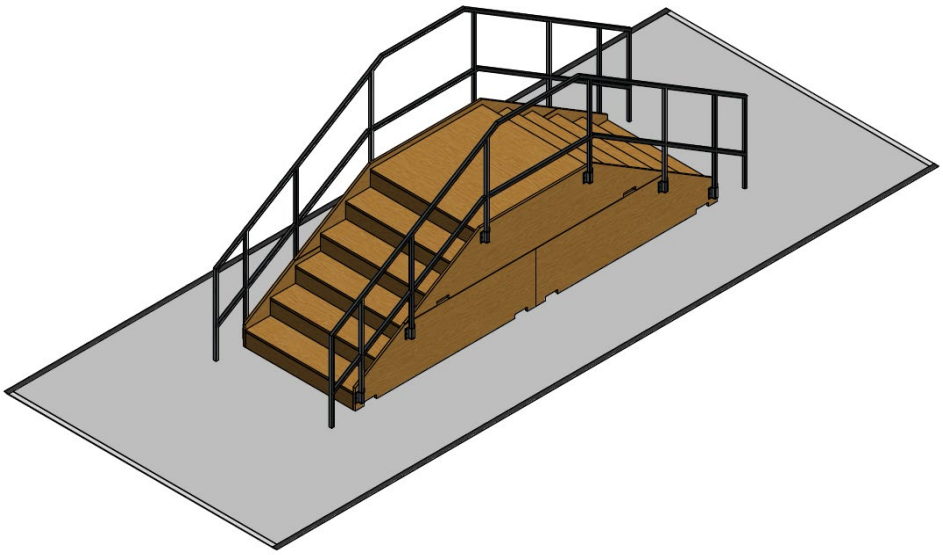

Top: Illustration of task set-up. Bottom: Dimension of task set-up.

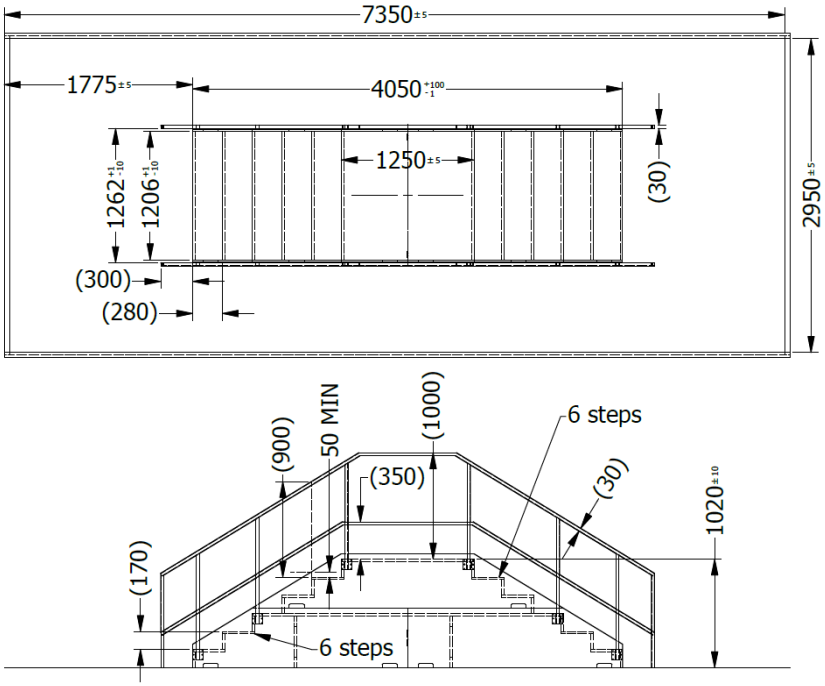

6.4.4.3 Task Rules

EXO-STAIRS-1	Pilots must ascend and descend the stairs once in the direction of the race (once up, once down).
EXO-STAIRS-2	Pilots are allowed to place two feet on one step at the same time.
EXO-STAIRS-3	Pilots are not allowed to omit single steps or jump over steps. Thus, each step must be stepped on with at least one foot.

6.4.5 Tilted Path

6.4.5.1 Introduction

In daily life, the ground is sometimes tilted perpendicular to the walking direction, e.g. when walking on nature trails or across a field. Such tilted paths challenge the ability to adapt toe clearance of the feet of the exoskeleton and abduction/adduction of the hip as well as pronation/supination of the foot are required. When walking outside, the type of surface and thus the interaction forces between the foot and the ground can vary depending on the type of surface.

In this task, pilots must walk across a tilted path.

6.4.5.2 Elements

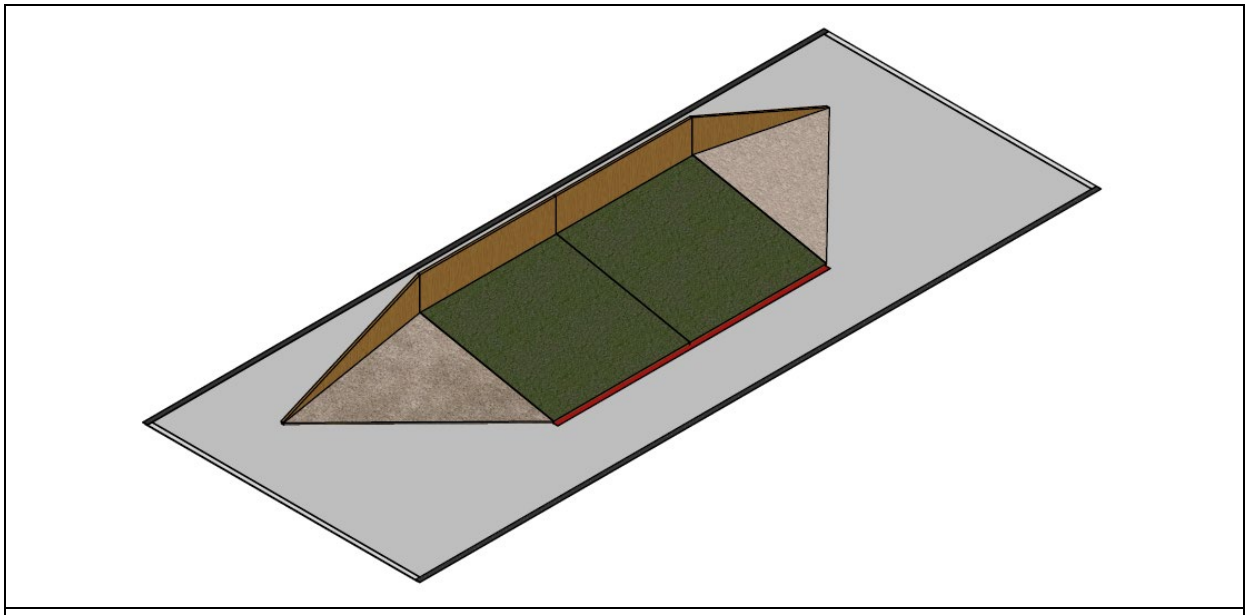

Top: Illustration of task set-up. Bottom: Dimensions of task set-up.

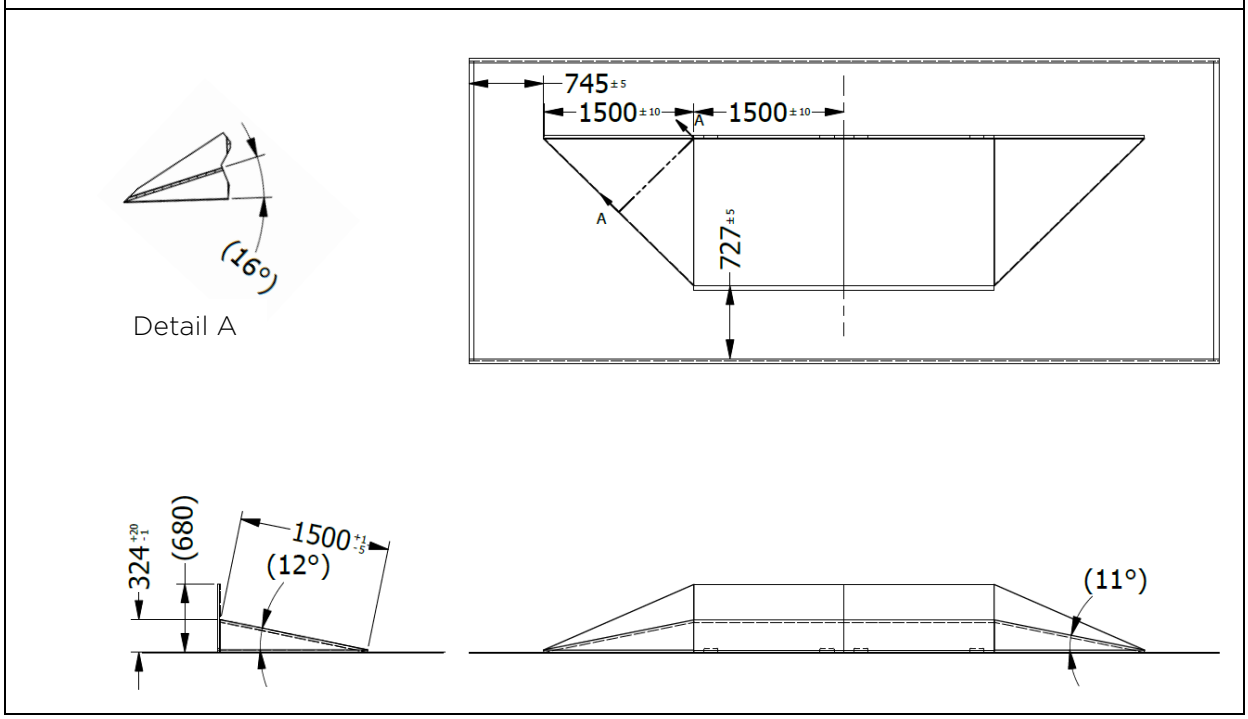

6.4.5.3 Task Rules

EXO-TILTED-1	Pilots must walk across the tilted path once in the direction of the race.
EXO-TILTED-2	Pilots are only allowed to enter and exit the obstacle across the grey ramps (i.e. both feet must cross, in their entirety, the separation line between the grey and the green surfaces. A foot swing that crosses the red line is not allowed.)
EXO-TILTED-3	The crutches may be placed anywhere on the obstacle (also outside the red line).

6.4.6 Ramp & Door

6.4.6.1 Introduction

Inclined surfaces such as ramps in front of buildings or as part of a nature path are common in daily life. Climbing and descending ramps requires the ability to maintain body balance while significant moments about the hip and the knee joint in a single leg must be controlled. The characteristics of ramps are outlined in construction standards yet not all ramps in daily life meet these criteria.

The ability to open and close doors is challenging as an exoskeleton user since the crutches must be carried and precise foot placement in confined space (i.e. step backwards and sidewards) is required.

In this task, the pilots have to climb a steep slope, open and close a door and descend a steep slope.

6.4.6.2 Elements

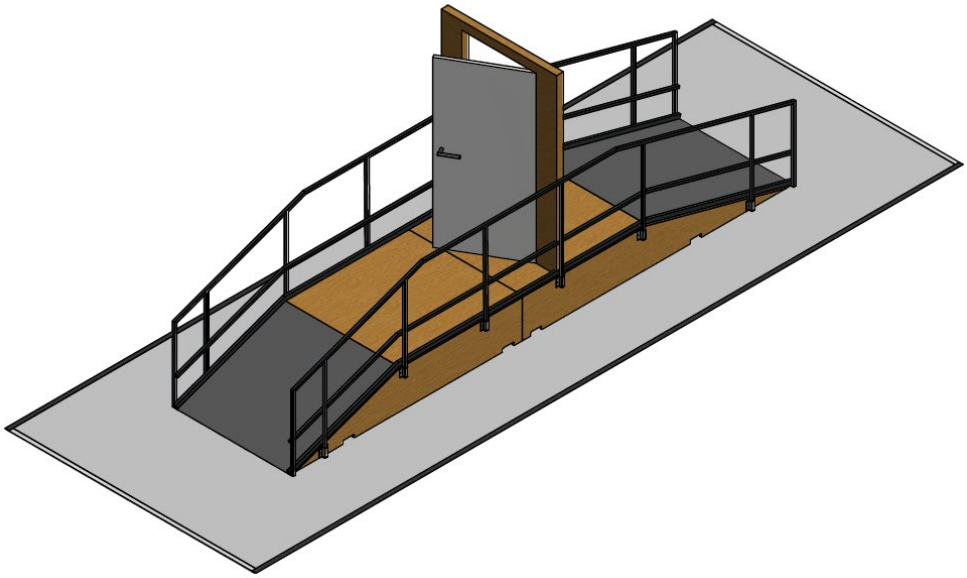

Top: Illustration of task set-up. Bottom: Dimensions of task set-up.

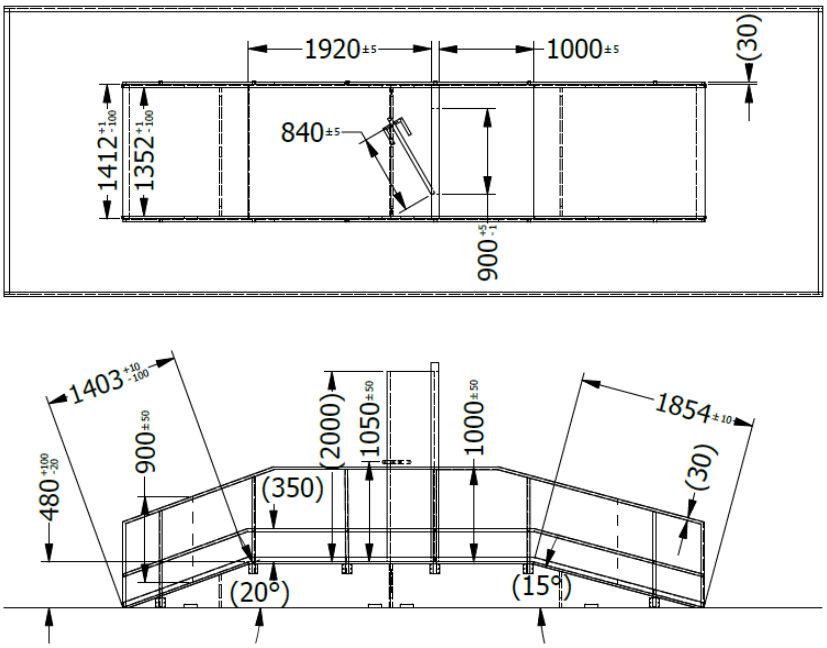

6.4.6.3 Task rules

EXO-RAMP-1 The ramp must first be ascended on the more inclined slope (20°) and then descended on the less inclined slope (15°).

EXO-RAMP-2 The door must be opened, passed through and closed. If the door is not closed when passing the finish line of the task, the task is failed.

6.5 Competition mode and scoring system

See also sections *1.3* and *1.4*.

Time limit: 10 min

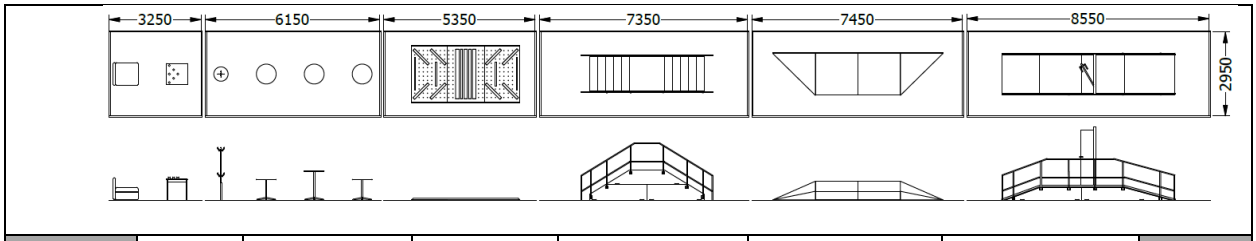

Task	Sit & Stand	Slalom	Rough Terrain	Stairs	Tilted Path	Ramp & Door	Total
Points	15	14	16	20	18	17	100

7. Powered Wheelchair Race

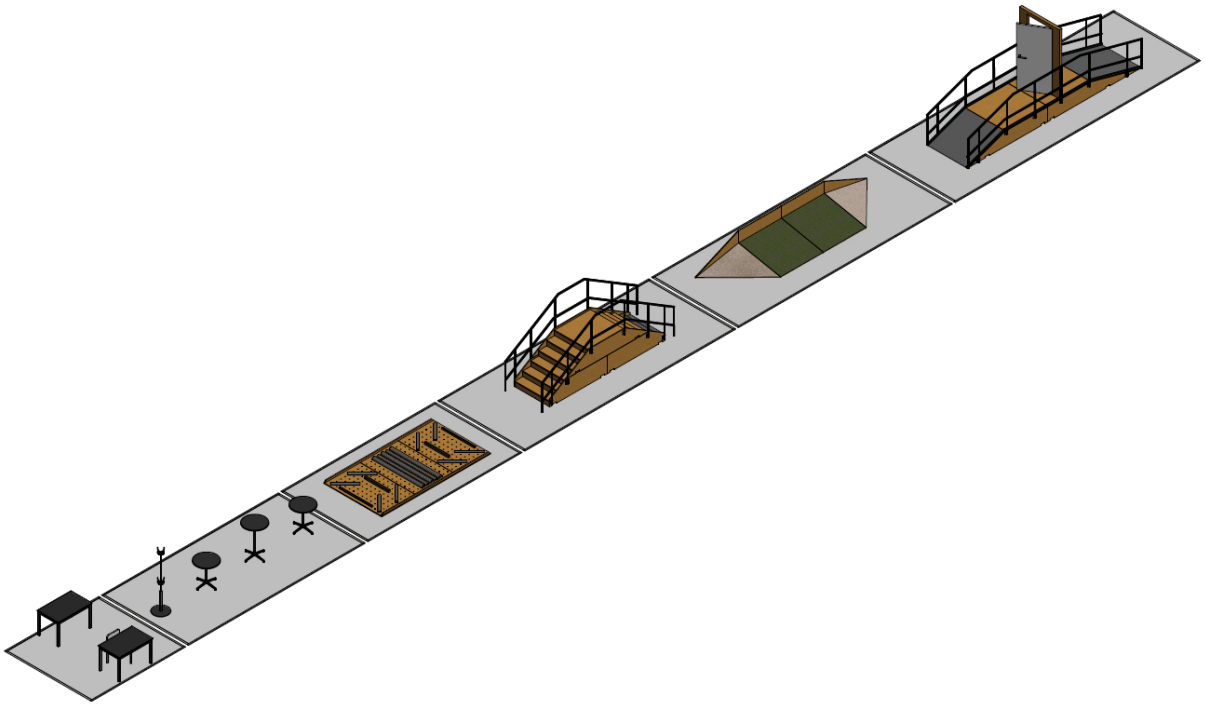

Overview of the Powered Wheelchair Race tasks.

7.1 Introduction

Pilots with a severe walking disability (e.g. due to tetraplegia, amputation or a neurodegenerative disease) equipped with powered wheelchairs are challenged by tasks related to daily life activities. The tasks are designed to test the technology, as well as the skills of the pilots when navigating their powered wheelchair. Furthermore, the tasks challenge if the design of the device takes in to account size restrictions given in daily life (e.g. the height of a standard table, inner width of a door).

The goal is to solve six different tasks within the race time limit.

7.2 Inclusion criteria

7.2.1 Pilots

In addition to the general inclusion criteria described in section 1.1, pilots must fulfil the following criteria to be eligible for participation:

- Pilots with severe walking disability due to any kind of central nervous system disease or injury, any systemic neural or muscular disease or bilateral above knee amputation are eligible.
- Pilots must be able to operate and steer their wheelchair. Thus, the pilots must have sufficient voluntary control of head, shoulder, hand, finger, tongue and/or voice in order to operate an input device.

7.2.2 Technology

In addition to the General Rules described in section 1.2, the following criteria apply for the powered wheelchair technology:

- Both actuated wheelchairs and manual wheelchairs that are powered by an external device are allowed as long as the power is solely produced by the device and not by the pilot.
- Input (control) devices can include any standard or novel technology such as a hand joystick, head joystick, a sip & puff controller, a tongue drive, headrest switches, a touchpad, a tiller, speech processing methods or any other technology.
- The maximum weight of the wheelchair (excluding the pilot) is 200 kg.
- The width of the wheelchair must not exceed 900 mm (otherwise, it cannot pass many of the obstacles).
- Backpacks, bags, etc. are not allowed to be attached to the powered wheelchairs during the race (essential equipment is accepted, e.g. oxygen, feeds, ventilators).
- Chest, shoulder, leg, foot and head restraints are allowed.

7.3 Specific rules

WHL-1	Touching the ground on or beyond the areas coloured in red in the following illustrations with any part of the wheelchair or body is not allowed.
WHL-2	Pilots are not allowed to enter or exit the obstacles in any location coloured in red in the following illustrations.
WHL-3	Pilots are only allowed to operate the technical support used for opening and closing the door while they attempt the respective task. While attempting all other tasks, the technical support must be in a safe state such that it cannot present an impending hazard.
WHL-4	Wearing a helmet is mandatory. The teams are required to provide their own helmet.

WHL-5 It is not allowed to use handrails. If any handrails are used to support movement or action or used to keep balance by grasping, pulling, pushing or similar, with any part of the body, the respective task is failed. Handrails are provided for safety reasons only.

7.4 Task description

Each task is described in the following sections. In all of the following figures, the direction of the race is (bottom) left to (top) right.

7.4.1 Table

7.4.1.1 Introduction

Powered wheelchairs are often too bulky to fit under a standard table, yet this is critical for social interaction (i.e. in a restaurant) or at work. Pilots should be able to drive close to a table in such a way that the thighs of the pilot fit below the table top.

In this task the pilots have to steer their wheelchair so that half of their thighs are placed under a table without moving any furniture.

7.4.1.2 Elements

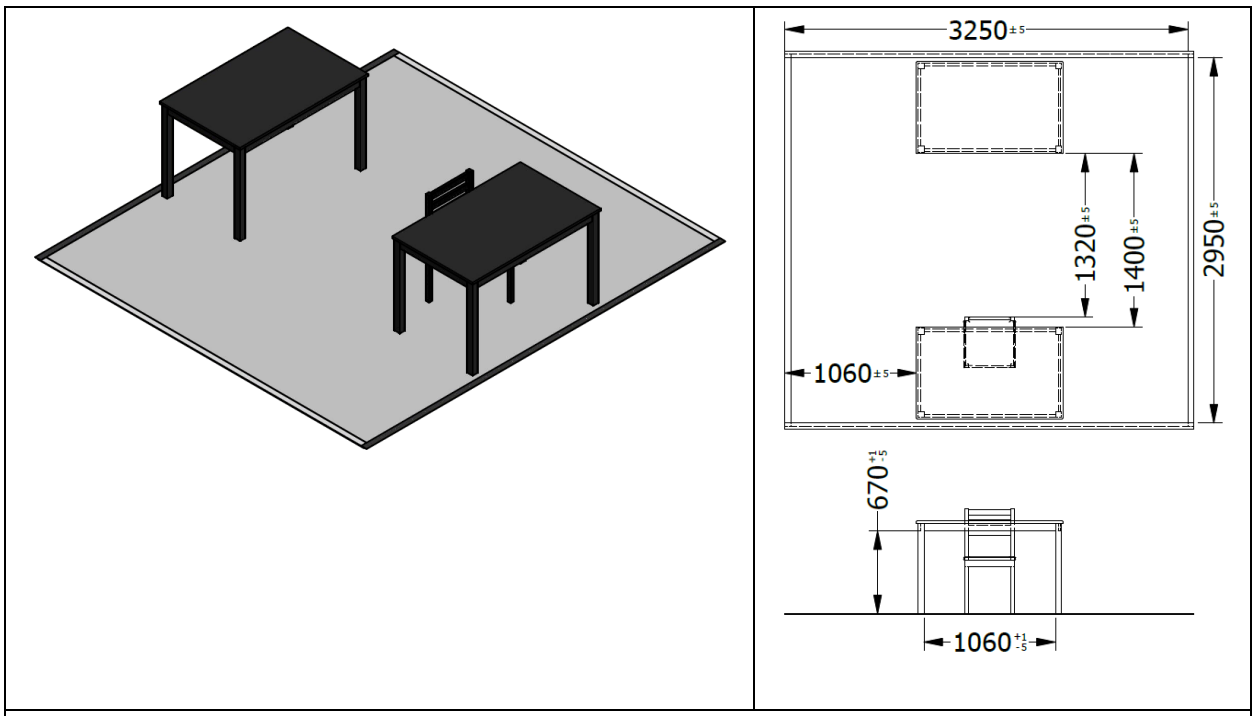

Top left: Illustration of task set-up. Tables and chair are IKEA Lerhamn. Top right: Dimensions of task set-up.

7.4.1.3 Task rules

WHL-TABLE-1 The knees and half of the thighs must be covered by the long side of the left-hand table (in the direction of the race). The pilots are not allowed to remove their feet from the footrest.

7.4.1.4 Comment

- The referee verbally confirms correct execution.

7.4.2 Slalom

7.4.2.1 Introduction

Often in daily life, it is necessary to navigate around static or moving obstacles in order to avoid collisions or to reach a certain destination.

In this task, pilots have to negotiate a slalom composed of single pieces of furniture.

7.4.2.2 Elements

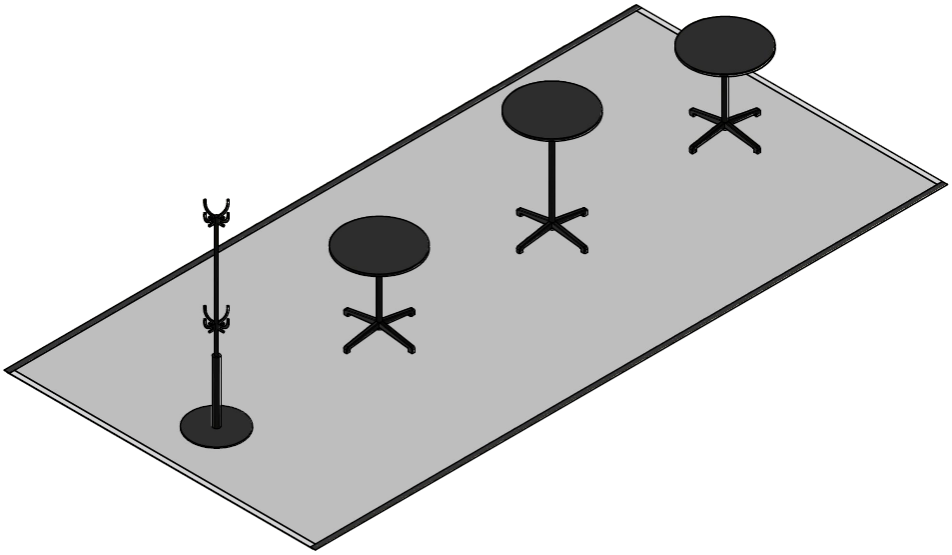

Top: Illustration of task set-up. Coat rack is IKEA Hemnes, tables are IKEA Stensele.
Bottom: Dimensions of task set-up.

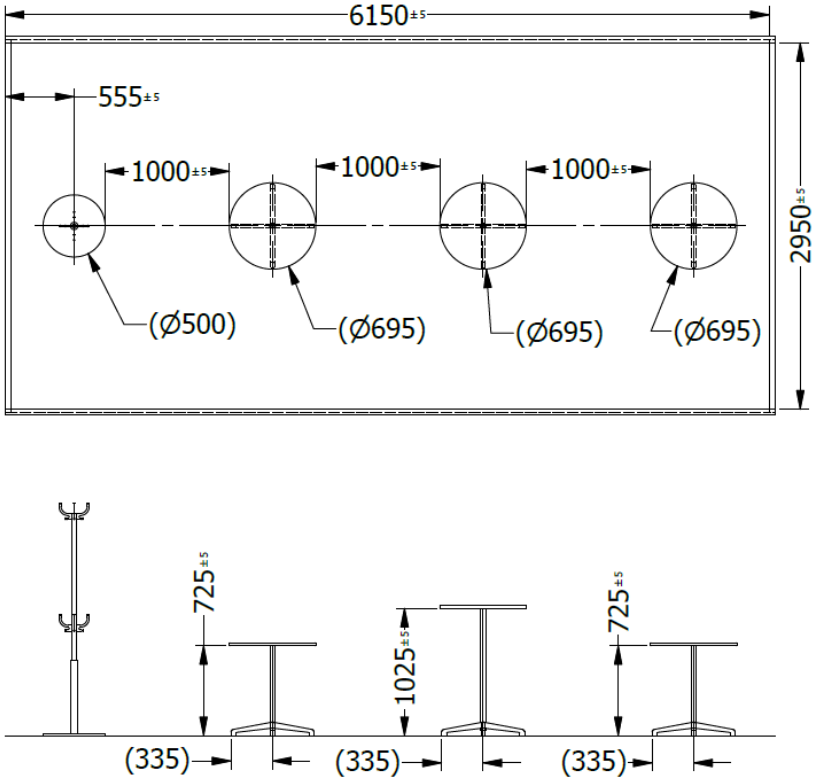

7.4.2.3 Task Rules

WHL-SLALOM-1 Two consecutive pieces of furniture are considered a pair. The three pairs must be passed through once.

7.4.2.4 Comment

- To start the task, the first two pieces (i.e. pair) of furniture can be entered from the left or from the right-hand side.

7.4.3 Rough Terrain

7.4.3.1 Introduction

In daily life, not all surfaces are paved and smooth and powered wheelchairs must be able to cope with such situations. This task tests the ability of a wheelchair pilot to drive over uneven terrain such as cobblestones.

In this task, the pilots have to drive across a rough terrain.

7.4.3.2 Elements

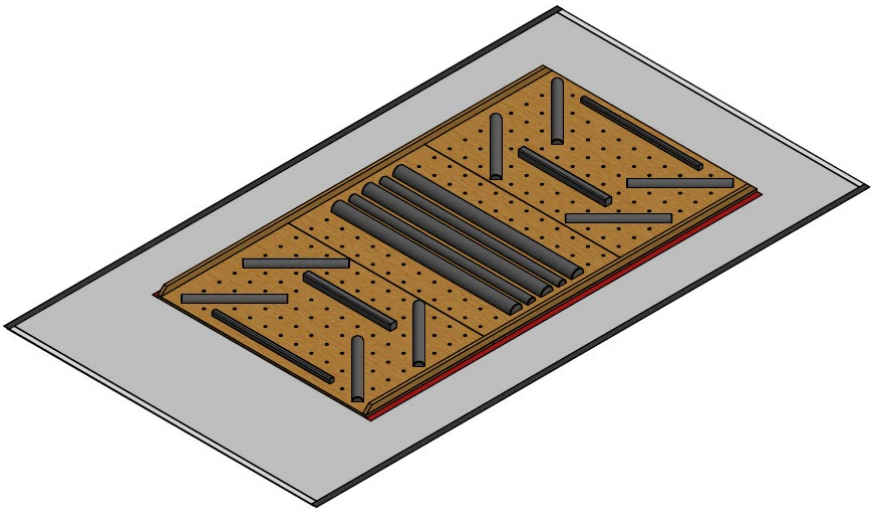

Top: Illustration of task set-up. Bottom: Dimensions of task set-up.

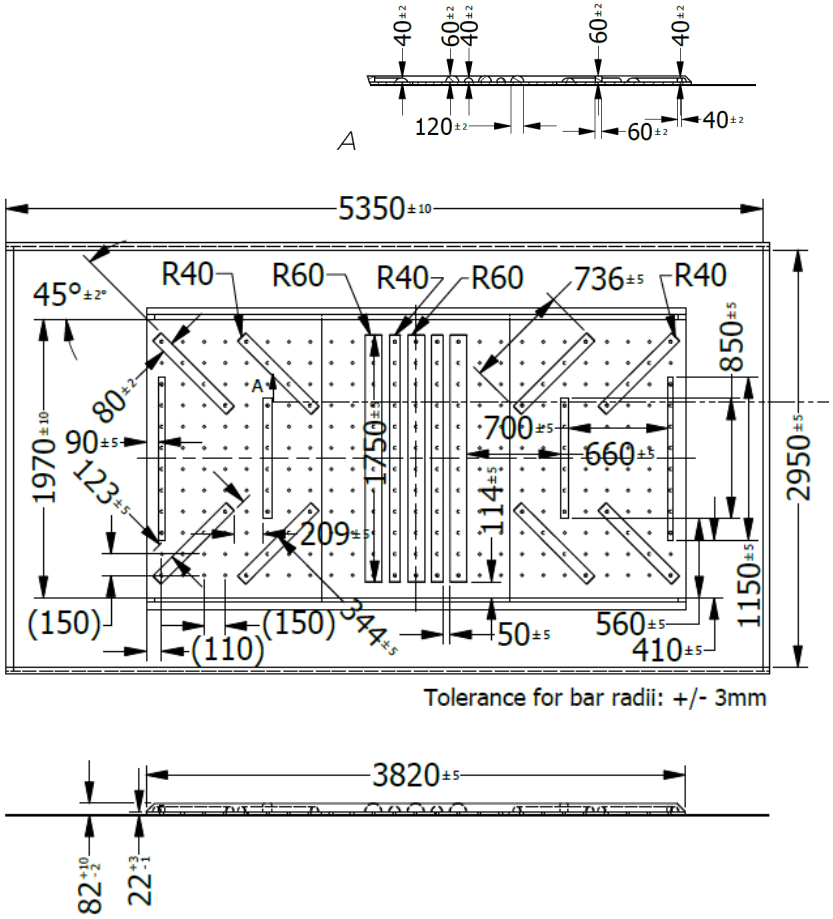

7.4.3.3 Task Rules

WHL-ROUGH-1 Pilots must cross the rough terrain once in direction of the race.

WHL-ROUGH-2 Crossing the boundaries of the rough terrain on the side is not allowed (i.e. the pilot can only exit at the start and end). Touching the wooden rails at the side of the terrain is allowed, however, driving on them is not allowed.

7.4.4 Stairs

7.4.4.1 Introduction

Stairs are omnipresent in everyday life, but it is a great challenge for powered wheelchairs to overcome them. Significant torques must be controlled very precisely in order to overcome the height difference of the single steps. At the same time, the device must no slip on the steps in order to guarantee the pilots safety. In the event of a sudden obstacle, the pilot must also be able to bring the device to an immediate standstill.

In this task, pilots have to ascend and descend standard stairs. Pilots must bring their wheelchair to a standstill while on the descent from the stairs.

7.4.4.2 Elements

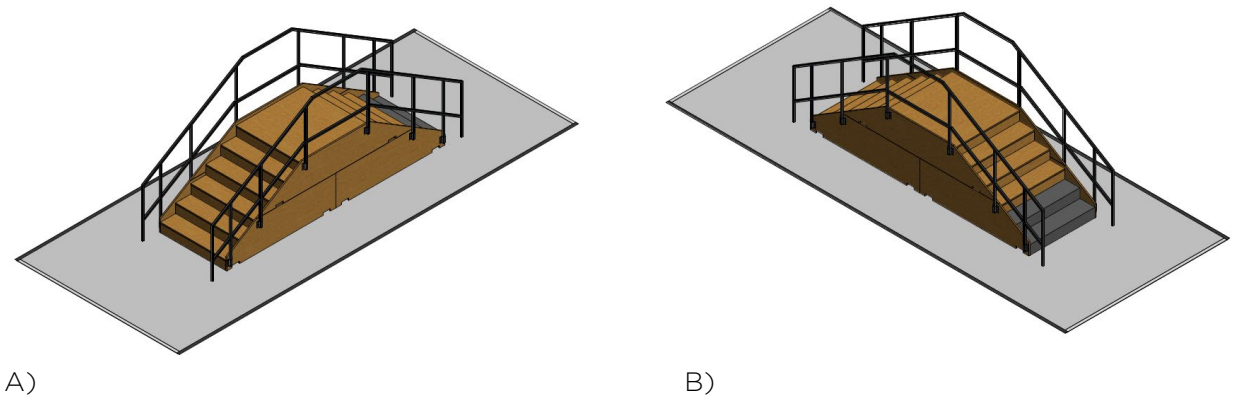

Top: Illustration of task set-up. B) is rotated by 90° compared to A). Bottom: Dimensions of task set-up.

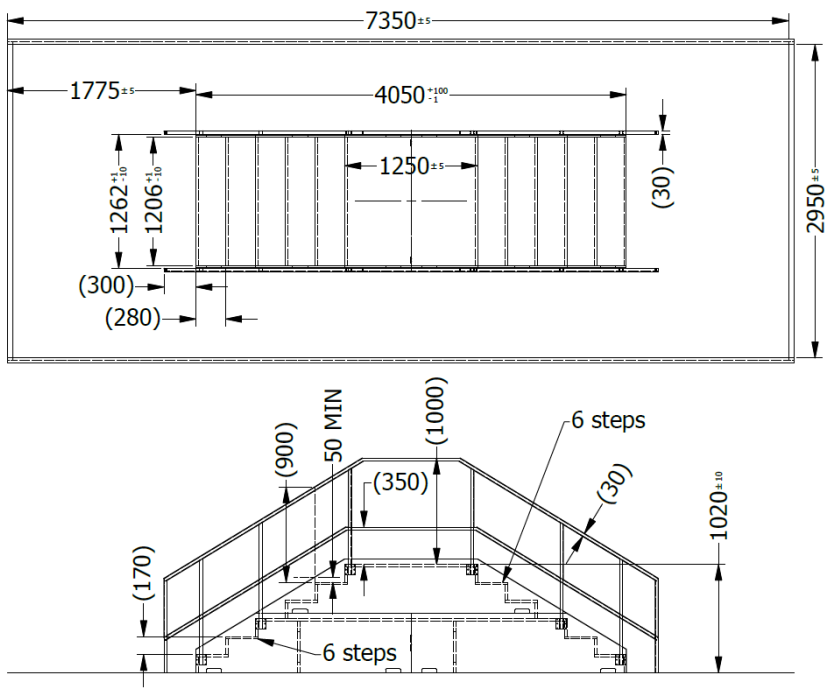

7.4.4.3 Task Rules

WHL-STAIRS-1 Pilots must ascend and descend the stairs once in the direction of the race (once up, once down).

WHL-STAIRS-2 When descending the stairs, pilots must bring their wheelchair to a standstill while the foremost part of the vehicle that can touch the ground is in contact with any part of the second to last or last step and does not touch the ground. If the ground is touched before the standstill of the wheelchair, the task is failed.

7.4.4.4 Comments

- The second to last and last step are coloured for better visibility.
- The referee verbally confirms the standstill of the wheelchair.

7.4.5 Tilted Path

7.4.5.1 Introduction

In daily life, the ground is sometimes tilted perpendicular to the driving direction, e.g. when driving outdoors (e.g. on gravel roads). When driving across such tilted paths it can be challenging for the pilot to maintain level, as the device tends to turn into the fall line of the inclination. Additionally, the type of surface and thus the interaction forces between the wheelchair and the ground can vary depending on the type of surface.

In this task, pilots must drive across a tilted path with changing surfaces.

7.4.5.2 Elements

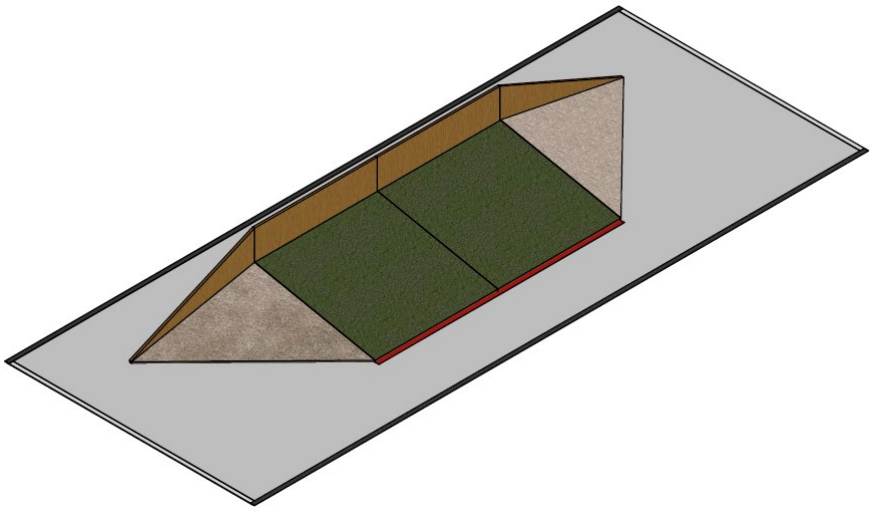

Top: Illustration of task set-up. Bottom: Dimensions of task set-up.

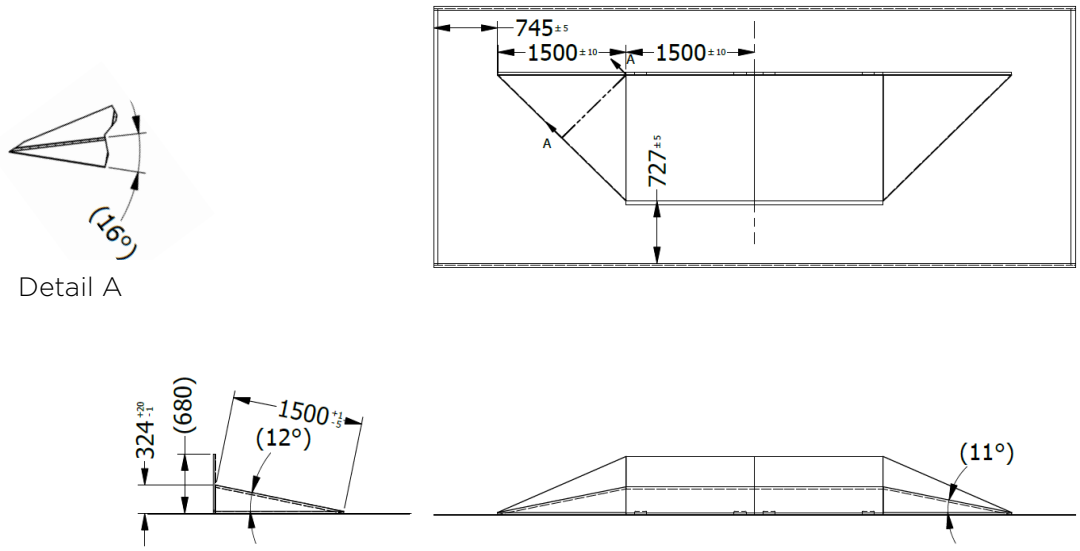

7.4.5.3 Task Rules

WHL-TILTED-1 Pilots must drive across the tilted path once in the direction of the race.

WHL-TILTED-2 Pilots are only allowed to enter and exit the obstacle across the grey ramps, i.e. the tracks/wheels of the wheelchair must cross, in their entirety, the separation line between the grey and the green surfaces.

7.4.6 Ramp & Door

7.4.6.1 Introduction

Inclined surfaces such as ramps in front of buildings or as part of a nature path are common in daily life. Climbing and descending ramps requires the ability to produce and control significant torques very precisely in order to overcome the height difference between the bottom and the top of the ramp. The characteristics of ramps are outlined in construction standards yet not all ramps in daily life meet these criteria.

Moreover, opening and closing doors is challenging for many users of powered wheelchairs. Either due to the limited motor abilities of their upper extremities or because their wheelchair does not allow them to get to the door close enough to be able to grip the door handle.

In this task, the pilots have to climb and descend steep slopes. Between the slopes, the pilots have to open and close a door with a technical support. The technical support must be externally powered.

7.4.6.2 Elements

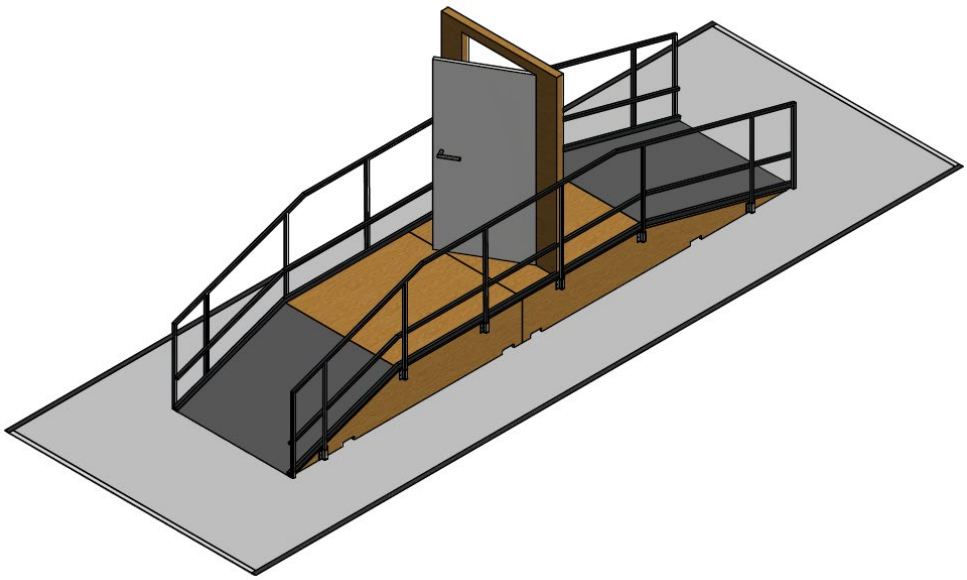

Top: Illustration of task set-up. Bottom: dimension of task set-up.

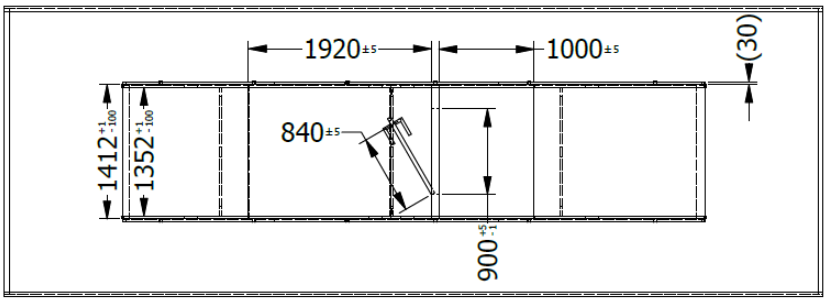

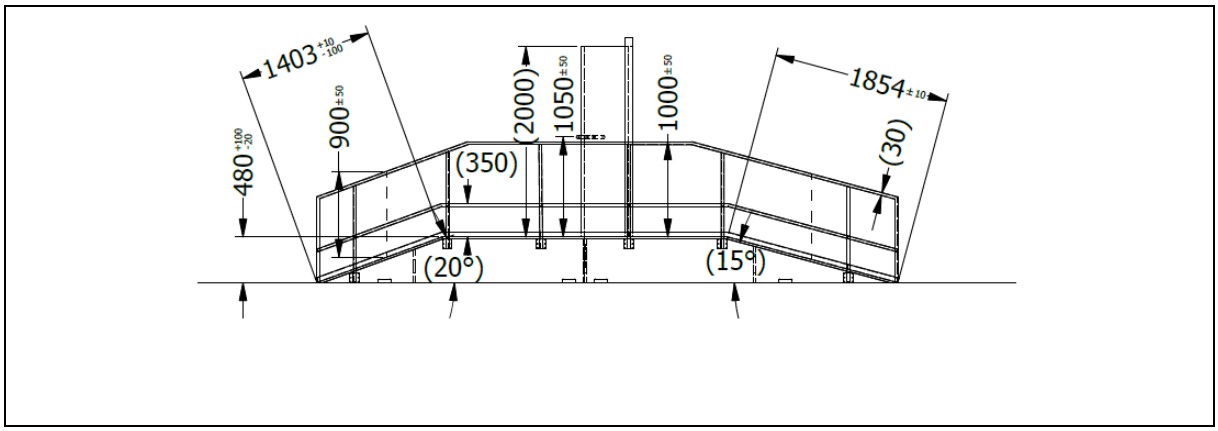

7.4.6.3 Task rules

WHL-RAMP-1 The ramp must first be ascended on the more inclined slope (20°) and then descended on the less inclined slope (15°).

WHL-RAMP-2 The door must be opened and closed using an externally powered technical support (e.g. robotic arm). After opening the door, the pilot must pass through the doorway and then close the door. If the door is not closed when the pilot passes the finish line, the task if failed.

WHL-RAMP-3 The energy required for actuating the externally powered technical support (e.g. positioning, actuate door handle, open/close door) must be provided by the technical support only and not by the pilot.

WHL-RAMP-4 The technical support is only allowed to be out of its safe state and to be operated while all of the elements of the device transferring load to the ground (e.g. wheels or tracks od the wheelchair) are, in their entirety, on the obstacle (i.e. ascending or descending ramps, or horizontal platform between the ramps).

WHL-RAMP-5 Pilots are not allowed to exchange the end effector of the technical support unless the process is fully externally powered and does not require any manipulation by the pilot other than the operation of the input device.

7.4.6.4 Comment

- Re. WHL-RAMP-4: Definition of safe state for a given technical support is subject to the judgement of the Head of Discipline.
- Re. WHL-RAMP-5: Pilots with good motor function of their upper extremities (e.g. low lesion level) would have an advantage over pilots with more severely impaired motor function of their upper extremities (e.g. high lesion level) if manual exchange of the end effector was allowed.

7.5 Competition Mode and Scoring System

See also sections *1.3* and *1.4*.

Time limit: 8 min

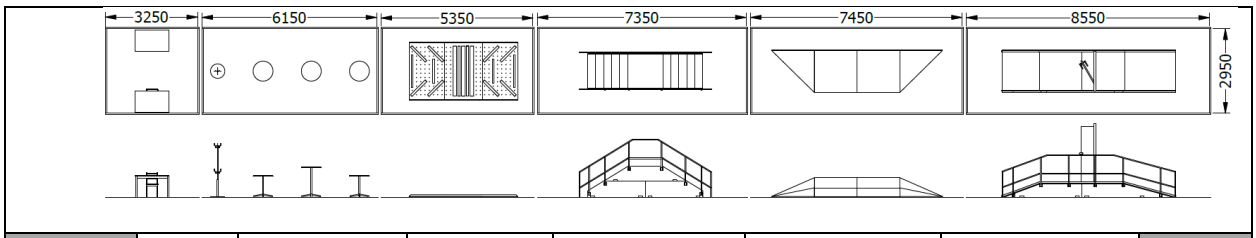

Task	Table	Slalom	Rough Terrain	Stairs	Tilted Path	Ramp & Door	Total
Points	16	15	17	18	14	20	100

8. Annex

8.1 Annex I – Appeals & Disciplinary Actions: DEFINITIONS AND PROCEDURES