I Appendix I: Competition infrastructure

I.1 Additional information

I.1.1 Version Management

Version	Comments	Status
1.0	This version includes additional information regarding the task infrastructure and drawings with dimensions crucial for the fairness of the competition.	30 Sep 2022 Kilian Baur completed
1.1	This version includes changes in the task names and infrastructure in the disciplines FES, ARM, LEG, EXO, WHL, ROB and VIS.	26 Jan 2023 Kilian Baur completed
1.2	This version includes changes regarding the task line infrastructure, general VIS infrastructure, revised infrastructure lists for the CYBATHLON Challenges 23 tasks, and unified length units.	28 Feb 2023 Kilian Baur completed
1.3	This version includes infrastructure required for the referees to be organized by hubs. The table size was corrected in the EXO/WHL/ROB Crowd task and the colour of the poles and hurdles in the LEG Hurdles task was changed to yellow.	15 Mar 2023 Kilian Baur completed
1.4	Generally: cleaning material added, safety areas for CYBATHLON 2024, comment regarding IKEA Lerhamn tables and IKEA Applarö benches. Where changes in the task can be expected, this is mentioned in the description (WHL Pick Up, ROB Pick Up, ROB Hanging Laundry). VIS: All tasks have changes. Introduction of blue coloured dimensions.	20 Jun 2023 Kilian Baur completed
1.5	Tolerances are increased to +/-5mm and +/-10mm depending on the type of dimension. EXO/WHL/ROB: All tasks have changes. Introduction of blue coloured dimensions. All changes to the previous version are highlighted.	21 Jul 2023 Kilian Baur completed
1.6	Torque tolerances are specified. ARM/LEG all tasks have changes. Introduction of blue coloured dimensions. WHL Uplift with major design change. Storage infrastructure on tasks added (e.g., VIS Empty seats). All changes to the previous version are highlighted.	29 Aug 2023 Kilian Baur completed
1.7	General remarks section was reorganized. Line tolerances was increased. Dimensions of marks for object placement were specified. Correction measures were added if torque/angle measurements are outside of the range. Responsibility of object colouring was specified. Task specific colouring details were added in the task sections. CourseCheck 1 and CourseCheck 2 as well as importance of blue dimensions were introduced. Subsection in the VIS specific remarks “avoiding sight on the task randomization” was deleted. BCI and FES Task infrastructure section was added. Colour options for IKEA Torkis and IKEA Lack objects were added. IKEA Sandsberg table square was replaced by IKEA tables that are available. Moste of the tasks received some changes regarding the placement dimensions and further minor changes. The task order was changed to stay in line with the order in the Races & Rules. Breaking changes are: ARM: - Hanging Laundry: Clothes defined - Do-it-yourself: Pliers defined, assembly of electronics added, 3D printing specified LEG: Some changes of the red objects to be balanced EXO/WHL/ROB: Crowd: new assembly for robot guidance ROB/WHL: Pick up: Bottle specified ROB: - Scarf: Height according to R&R - Spice up: Object changed - Dishwasher: Assembly information added VIS - Colours: Slight Colour changes - Footpath: Correction of the height stated in the table. - Grocery: Labels available - Forest: Placement marking instructions	29 Nov 2023 Kilian Baur completed

1.8	Naming defined: local hubs Colour suggestions based on Zurich hub for colouring objects specified, friction enhanced paint / sand ratio is a mass ratio ROB Dishwasher added to hinge force measurement ARM Hanging Laundry: Threaded rod marked, pictures for clothes lines and sweater ARM Do-It-Yourself: hammer handle colouring specified, wrong Kallax dimensions corrected EXO/WHL/ROB Crowd: code for Thymios updated, plans updated (i.p. regarding reference marks) EXO High Step: dimensions blue marked WHL Restaurant: white tape added ROB Scarf: scarf to be shortened, note regarding clothesline hight ROB Mailbox: added 3D print files ROB Dishwasher: comment regarding wire basket assembly VIS Doorbell: added 3D print files VIS Forest: wood to be the same type within all task, dimensions of cross section of horizontal bar VIS Footpath: wood to be the same type within all task .	22 Jan 2024 Kilian Baur completed
1.9	Generally: IKEA product specification are added where helpful to better identify the product (these additional specifications are not highlighted) Tolerances: tolerances increased Task space: Zurich hub: Information about hard rubber underneath PVC carpet Task space VIS: all lines haptically identifiable from an underlying cord, section relocated Task set-up: cross marks specified Material: referee material: scale, torque measurement equipment BCI: Infos about game computer and game manual added ARM Carry Bottles: weight and weight tolerances ARM Serving Food: lacrosse Balls will be sent to local hubs, new hight of shelf inside of oven object ARM: Storing Dishes: cutlery tray specified, typo Värdera corrected ARM Containers: general redesign of task ARM Haptic Bag: high compliance objects also provided to hubs ARM Hot Wire: comment regarding the organisation of the electronics added, isolation coloured white LEG Balance Beams: only two beams with blue colour LEG Stairs: plastic cup replaces original wine glass, new tray LEG Slopes: colouring of carpet LEG Wobbly Steps: doormat added, friction layer added LEG High Step: boxes fixation system details added LEG Ladder: new step stool, custom made shelf LEG Cross Country: modified length of entry and exit bar LEG Hurdles: number of poles/bars updated EXO Moving Parcel: weight and weight tolerances, box specification updated, new bottle cap link EXO Tilted Path: respecification of red carpet EXO Crowd: aluminium pipe coloured red EXO High Step: numbering of the boxes EXO Door: typo corrected, parts of the door handle set shipped to local hubs EXO Kitchen: only lower drawer has handle mounted, shelf door not mounted WHL Tilted Path: respecification of red carpet WHL Crowd: aluminium pipe coloured red WHL Door: typo corrected, parts of the door handle set shipped to local hubs WHL:Rocky Terrain: height of bars reduced WHL Doorstep: Thickness of threshold increased ROB Toothbrush: all dimensions unblued ROB Eating: apple product replaced ROB Crowd: aluminium pipe coloured red ROB Spice-up: Oil/vinegar prints as PDF available, size of papers specified ROB Door: typo corrected, parts of the door handle set shipped to local hubs ROB Touchscreen: kiosk mode recommendation VIS Dish up: IKEA Fruktskal model replaces original tray, new bottle cap link, weight and weight tolerances, IKEA Oftast specification updated, mark on glas and plate specified VIS Doorbell: IKEA Pax colour changed to dark grey, card size specified VIS Grocery: new size of boxes, IKEA Nimm added, labels provided to hubs, guiding rails specified VIS Sidewalk : new bottle cap link, marks for grid specificied, scooter and costumer stopper replaced VIS Finder: marks for objects specificied, apple product and smartphone replaced, banana product added VIS Footpath: colouring information updated, end poisnt marks specification updated VIS Colours : Yellow fabric excluded, examples sent to all teams, IKEA Nimm box added, colour names fixed VIS Touchscreen: kiosk mode recommandation VIS: Forest: points on carpet specification updated All changes to the previous version are highlighted.	29 Apr 2024 Kilian Baur completed

Table of Contents

Preamble

With the aim to standardize the task infrastructure of the CYBATHLON competition we specify the task infrastructure as far as necessary to facilitate equal and fair conditions for all participating teams.

This document provides a material list, dimensioned drawings, and further information about the task infrastructure in the disciplines BCI, FES, ARM, LEG, EXO, WHL, ROB and VIS. Furthermore, the task infrastructure provided by CYBATHLON to all teams and to local hubs is listed.

I.2 General remarks

I.2.1 Dimensions

If not stated otherwise, all dimensions presented without any units are measured in millimetres (mm).

I.2.2 Competition set-up

I.2.2.1 Competition set-up in BCI & FES

Competition set up in the disciplines BCI and FES:

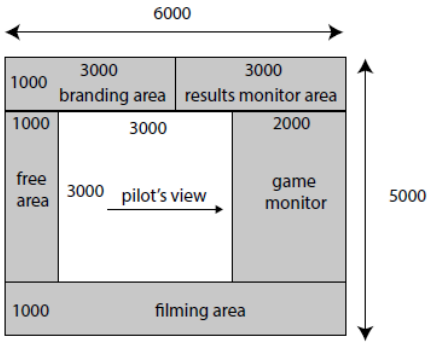

I.2.2.2 Competition set-up in ARM, LEG, EXO, WHL, ROB & VIS

Task set up in line for hubs in the disciplines ARM, LEG, EXO, WHL, ROB and VIS:

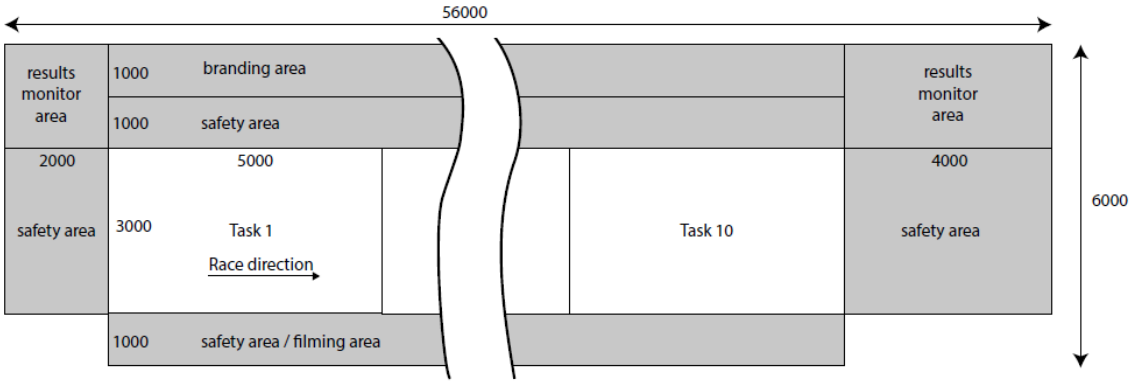

Task set up in parallel for hubs in the disciplines ARM, LEG, EXO, WHL, ROB and VIS:

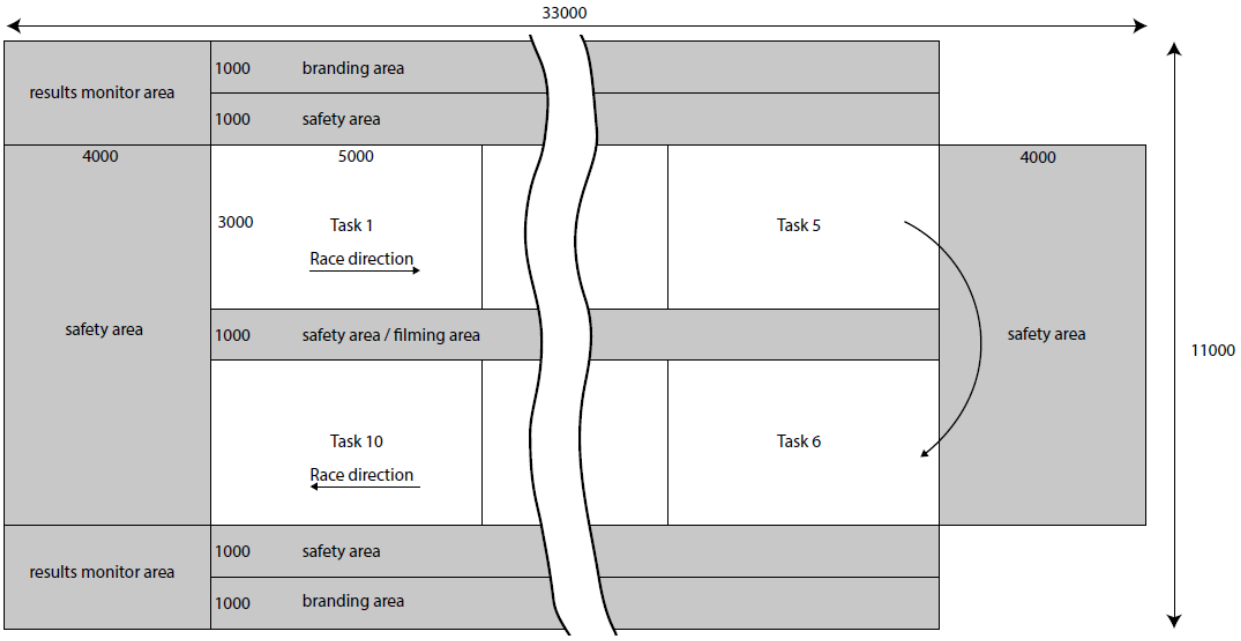

I.2.2.2.1 Safety areas

Around the racetrack there are safety areas defined. There must be no objects in these areas. Please prepare your hub such that you can fulfil this requirement. In the figure below the safety areas are illustrated and dimensioned accordingly.

I.2.2.2.2 Task space

Every task must be set up on a solid-coloured surface (e.g., no distracting lines) with a homogeneous haptic perception (i.e., no surface change or seams). The Zurich hub will use a 2 mm PVC carpet in royal blue colour:

In the Zurich hub, there is a hard rubber layer under and around the PVC carpet:

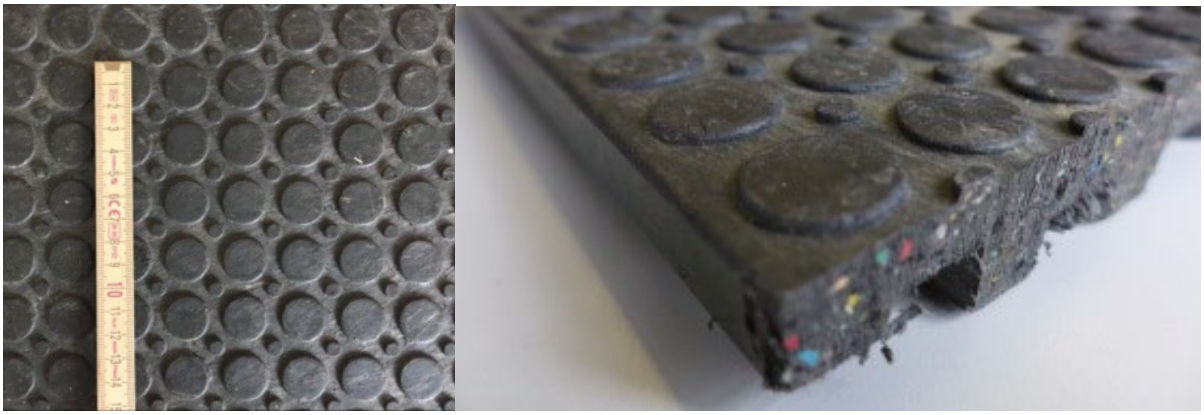

The general set-up of a task consists of a start line, a finish line (both white) and two side lines (black). The tolerance of the distance between two opposite lines is +/- 20mm. The race direction in the drawings within this document is from left to right.

The four lines are represented by black and white tape and span the task space. The tape must be organized by the hubs and has a width of 50mm (+/- 5mm).

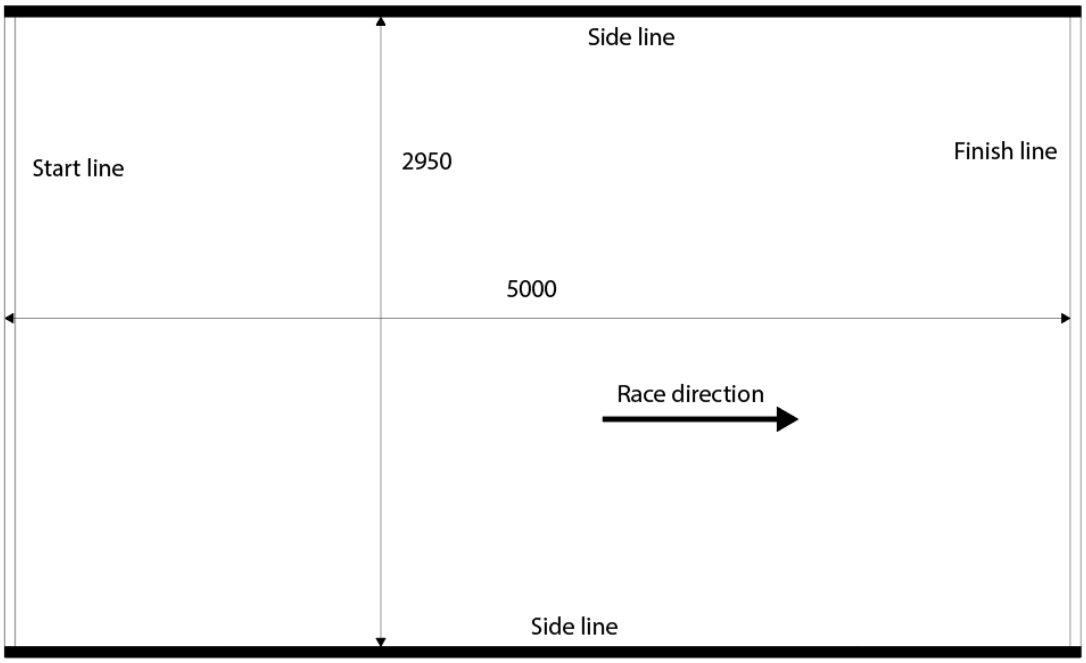

I.2.2.2.3 Task space VIS

For haptic guidance with a traditional white can, the centre of the start line, finish line, and side lines must be haptically identifiable. We recommend a decent haptic representation of this centre line (e.g., carpet edge if a carpet is underneath the taped lines, edge of a thicker tape or flat (1-3mm thick) wooden bar underneath).

The hub in Zurich all lines will be haptically identifiable by a 1.5mm thick cord underneath the marking tape.

I.2.3 Task infrastructure provided to registered teams

Registered teams are teams that have received the approval to be registered for a specific CYBATHLON event. The teams receive the infrastructure listed as “provided by CYBATHLON to all registered teams” of the selected tasks for this specific event. The infrastructure to be provided is stated at each task specifically. We reserve the right to add more objects to the group of provided objects as well as remove objects from that group. Any deviations from the listed products must be confirmed by the CYBATHLON organizers.

I.2.4 Task drawings and task set-up

In sections I.5 to I.10 all the task infrastructure is described by specific drawings. The drawing in the “General task set-up” subsection specifies the placing of the objects

on the task space. The drawings in the "Infrastructure dimensions" subsection specify the dimensions of the infrastructure itself.

I.2.4.1 Tolerances for manufacturing of task infrastructure

If not stated otherwise, all dimensions must be within a tolerance of +/- 10mm.

I.2.4.2 Tolerances for task set-up

The tolerance for placing the task infrastructure on the competition floor +/- 20mm for all dimensions indicated in the general task set-up drawings presented in the task subsections below.

The blue coloured dimensions will be checked by CYBATHLON officials at the day before the competition. (so called CourseCheck 1)

The corners/points for the placement of the competition infrastructure must be marked with "L" signs for corners and with crosses for points/centres on the floor (or on the carpet) with maximum line width of 5mm and maximum line length of 60mm.

At the Zurich hub we use marker pen. If you don't use a carpet, you may set the marks with slim tape directly on the floor.

The tolerances of the placement of objects on task infrastructure will be defined with markings on foils which will be provided to local hubs.

I.2.5 Task infrastructure provided to local hubs

Local hubs are official venues of a specific CYBATHLON event. The hubs receive the infrastructure listed as "provided by CYBATHLON to all local hubs" of the selected tasks for this specific event. The infrastructure to be provided is stated at each task specifically. We reserve the right to add more or remove objects to the group of provided objects.

I.2.6 IKEA objects

Whenever possible, standard furniture and objects available at IKEA are used in the competition tasks. If available by 2024, the currently presented furniture and objects will be used in the competition. IKEA furniture and objects, as well as associated dimensions are subject to change.

I.2.7 3d-printed objects

The files for the 3d-printed objects are available for registered teams in the download section of the CYBATHLON dashboard. Objects must be printed with

- polylactide (PLA), a weblink to the product is listed in the task infrastructure sections below (products of similar quality are also accepted).
- a *maximal* layer height of 0.35 mm (recommended: 0.2 mm)
- a wall thickness of the shell (side-, top-, and bottom wall) between [0.8 mm – 1 mm]
- infill density of 20 %

We recommend:

- a printing temperature of [215 °C - 230 °C]
- a build plate temperature of 60 °C
- to enable support structures during the print process

I.2.8 Colour of objects

The colour is indicated in the task infrastructure tables. The specified colouring of the objects must be applied to facilitate refereeing according to the rules (i.e., blue and red colouring) and to produce a common appearance of the competition infrastructure across all hubs.

If the object cannot be ordered with the indicated colour the hub is responsible for the colouring of the object.

In the Zurich hub, for the object colouring we use the following standardized colours:

- Blue: RAL 5010 (“gentian blue”):
- Red: RAL 3020 (“traffic red”) or RAL 3000 (“flame red”)
- Grey: RAL 7005 (“mouse grey”) or RAL 7001 (“silver grey”)
- Black: RAL 9005 (“jet black”)

I.2.9 Friction enhancing

In this appendix we specify the surfaces that must and the surfaces that may have increased friction. Surfaces with increased friction must be painted grey. The colouring of the specified surfaces is only mandatory for local hubs.

The Zurich hub applies a paint containing quartz sand. The mixing mass ratio is 1:0.13, and the grain size is 0.1 – 0.6 mm. Anti-slip tape (e.g., Grip Tape) may be used as an alternative. The CYBATHLON Zurich hub colours the specified surfaces in silver grey (RAL 7001).

In some tasks there is a specific friction layer required. Sheets of the friction layer will be provided to the local hubs.

I.2.10 CourseCheck 1 and CourseCheck 2

The infrastructure in general, the markings on the competition and the blue dimensions in the task drawings will be checked by a CYBATHLON official at the day before the competition (CourseCheck 1). On competition day the placement of the objects will be checked as well as the functionality of the infrastructure (CourseCheck2).

I.2.10.1 Material for referees

The hub has to organize the tools so that the referee can perform the checks (CourseCheck 1 and CourseCheck 2) and the measures required before the race start:

- Cleaning material to remove dirt and liquids from the competition area
- Measuring tape with resolution of 1mm, min. 5m length
- Scale with resolution of 1g (only in ARM, EXO, WHL, ROB, VIS)
- Disinfection spray (only in ROB)
- Material for measuring the torque tolerances (only in ARM, EXO, WHL, ROB; see I.2.10.2):

Units	Object description	Details / Model
	Cable ties	Not specified
1	Calibrated force gauge	We used MECMESIN AFG, Typ 100 N / 0.2 N
1	Tape	Strong adhesive tape
1	Spirit level	-
1	Goniometer / Protractor	Also possible to use a smartphone app for measuring angles.

I.2.10.2 Torque tolerances for hinges

The hinges of the following tasks must be checked:

- ARM – Serving Food
- EXO – Door
- WHL – Door
- ROB – Door
- ROB - Dishwasher

We present the required material, the procedure and the tolerances in this section.

I.2.10.2.1 ARM – Serving Food // ROB – Dishwasher

The following test procedure is required to verify the required force for opening the door of the dishwasher and the opening angle at which the door opens automatically.

I.2.10.2.1.1Force measurement

<table>
<tr>
<td> 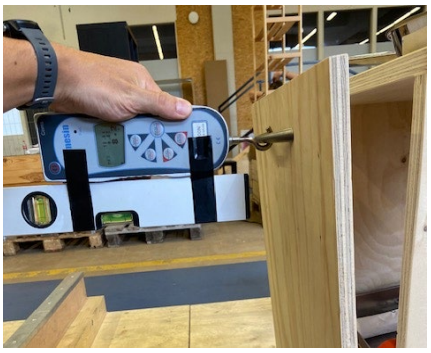 </td>
<td>For the measurement of the required horizontal force to open the dishwasher door, attach a spirit level to your force gauge, so you can verify that you are pulling in horizontal direction.

Close the door of the dishwasher.

Attach your force gauge with its adapter to the door handle and start smoothly pulling away from the dishwasher until the door opens by itself due to gravitational force.</td>
</tr>
<tr>
<td>
<table>
<tr><th></th><th>Max. Force [N]</th></tr>
<tr><td>1</td><td>10.2</td></tr>
<tr><td>2</td><td>10.0</td></tr>
<tr><td>3</td><td>9.8</td></tr>
<tr><td>4</td><td>10.2</td></tr>
<tr><td>5</td><td>10.2</td></tr>
<tr><td>6</td><td>9.4</td></tr>
<tr><td>7</td><td>9.8</td></tr>
<tr><td>8</td><td>10.4</td></tr>
<tr><td>9</td><td>9.4</td></tr>
<tr><td>10</td><td>10.2</td></tr>
<tr><td colspan="2"></td></tr>
<tr><td>Average [N]</td><td>10.0</td></tr>
<tr><td>Varianz [N]</td><td>0.1</td></tr>
</table>
</td>
<td>Read out the maximal force that you pulled and note it down. Repeat the measurement 10 times.

Calculate the average and the variation. Your average force must be between 7 – 11 N and the variance < 0.3 N.

Take correction measures if the force is outside of the range, e.g., tighten hinge, and repeat the measurements.</td>
</tr>
</table>

I.2.10.2.1.2 Opening angle measurement

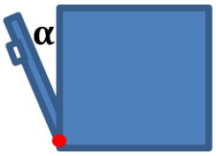	Place the point of origin of your protractor at the pivot point of the door (red point) and open slowly the door of the dishwasher. Measure the opening angle at which the door opens automatically due to gravitational force (this can be very slow). **The measured angle must lay between 18° - 28°.** If not, tune the hinges by adding dirt or lubricants to achieve the desired angle.

I.2.10.2.2 EXO/WHL/ROB – Door handle

The following test procedure is needed to verify the required pulling force for opening the door. Additionally, the angle of the door handle at which the door can be opened, needs to be verified.

I.2.10.2.2.1 Force measurement

1	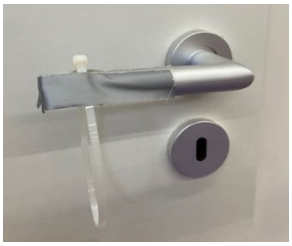 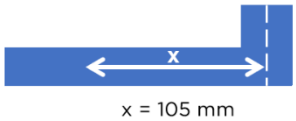	Grab a cable tie (or a piece of rope), close it and place it at a distance of 105 mm away from the pivot axis of the door handle. Fix it with a tape.

<table>
<tr>
<td>1</td>
<td> 

2. Door(knob)_01

	Max. Force [N]
1	18.4
2	19.0
3	17.8
4	17.8
5	18.2
6	18.0
7	17.8
8	17.8
9	17.8
10	17.8

Average [N]	18.0
Varianz [N]	0.2
</td>
<td>Close the door.

Attach your force gauge with its adapter to the end of the cable tie (or rope). Now, gently pull down on the force gauge and keep a small angle from the vertical axis. This way, the door will visibly open as soon as the door handle exceeds the opening angle.

Note down your maximal pulling force. Repeat the test 10 times. Your average pull force must lay between 16 – 20 N. The variance must be below 0.5 N!

Repeat the same procedure for both doors.</td>
</tr>
</table>

I.2.10.2.2.2 Opening angle measurement

<table>
<tr>
<td> 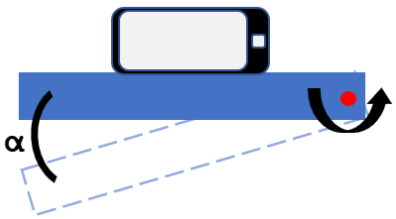

 </td>
<td>Close the door.

Place your mobile phone with the angle measurement app ON, onto the door handle (or use a protractor and place its point of origin onto the pivot axis (red point)). Now, gently pull down on the handle (keep the smartphone fixed) and pull with your fingers on the keyhole. As soon as you reach the opening angle, the door will open towards you.

The opening angle must lay between 10° – 14°.</td>
</tr>
</table>

	Take correction measures if the angle is outside of the range, e.g., adjust door frame, and repeat the measurements.

I.3 BCI

I.3.1 Task infrastructure

Object	Photo	Specification	Provided by CYBATHLON
Game computer		The game computer specification influences the game performance (e.g., loading time between tasks). More information can be found in the BCI game manual which can be downloaded in the dashboard for registered teams.	
Game	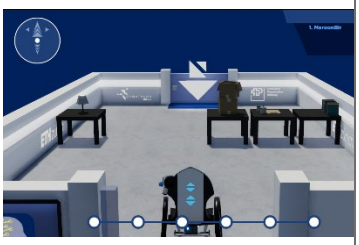	For CYBATHLON 2024 the current version of the BCI Game can be downloaded from the dashboard for registered teams.	To all registered teams

I.4 FES

I.4.1 Task infrastructure

Object	Photo	Specification	Source	Provided by CYBATHLON
Stationary bike trainer		KICKR V6 WiFi Smart Trainer	Wahoo	To all registered teams
Virtual race scenario	 [Indievelo.com]	At CYBATHLON 2024 and at the CYBATHLON Challenges 2024 the FES races will be conducted on the platform indievelo.com. Further details about the actual virtual racetrack, the settings and the virtual trike will follow until beginning of 2024.		To all registered teams
Heart rate monitoring device		The heart rate data will be presented in real time in the CYBATHLON stream and in the hubs.		

I.5 ARM

I.5.1 Carry Bottles

I.5.1.1 Task infrastructure

Units	Object description	Details / Model	Source	Provided by CYBATHLON
4	Bottle (1.5l), blue transparent	partially filled with water (0l = 37g, 0.5l = 537g, 1l = 1037g, 1.5l = 1537g), empty weight (with cap): 37g, weight tolerance: +/- 50g	VALSER	To local hubs only
4	Bottle cap, blue		VALSER	To local hubs only
1	Bottle crate, blue		BRAU- UND RAUCHSHOP	To local hubs only
1	Shelving unit	Kallax 1x2	IKEA	
2	Door mat	Österild (small, 40x60cm)	IKEA	

I.5.1.2 General task set-up

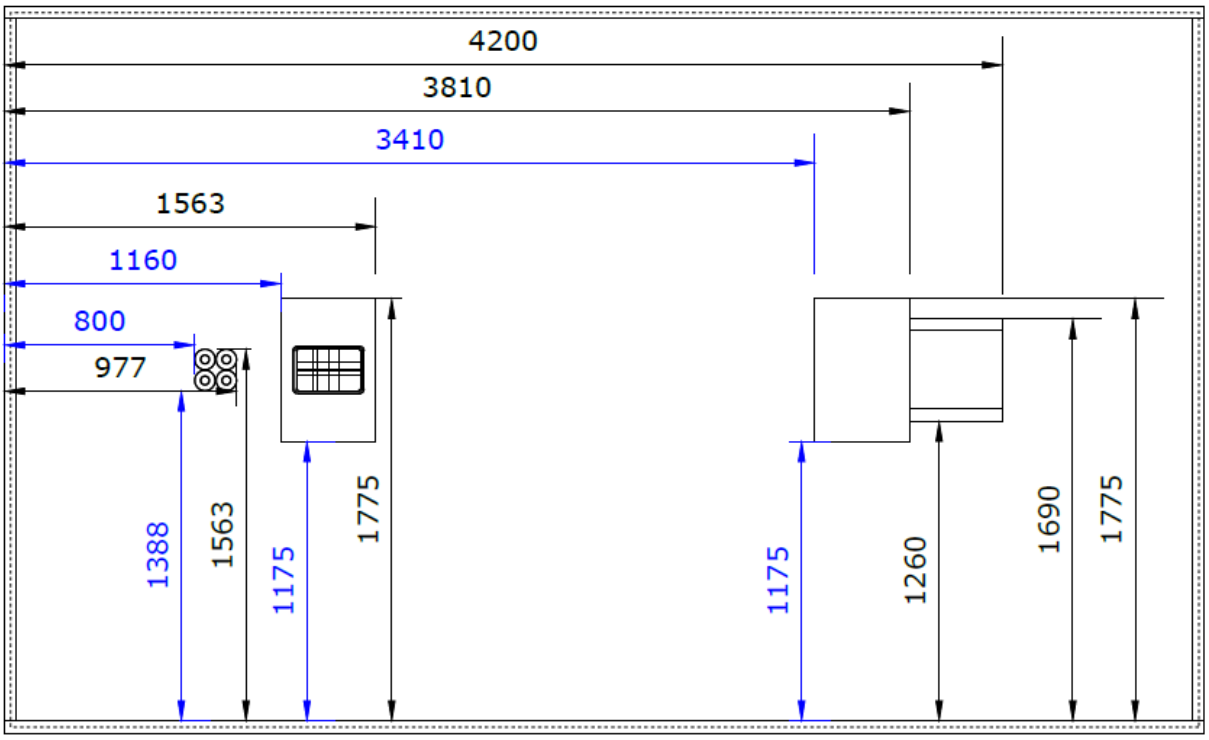

I.5.1.3 Infrastructure dimensions

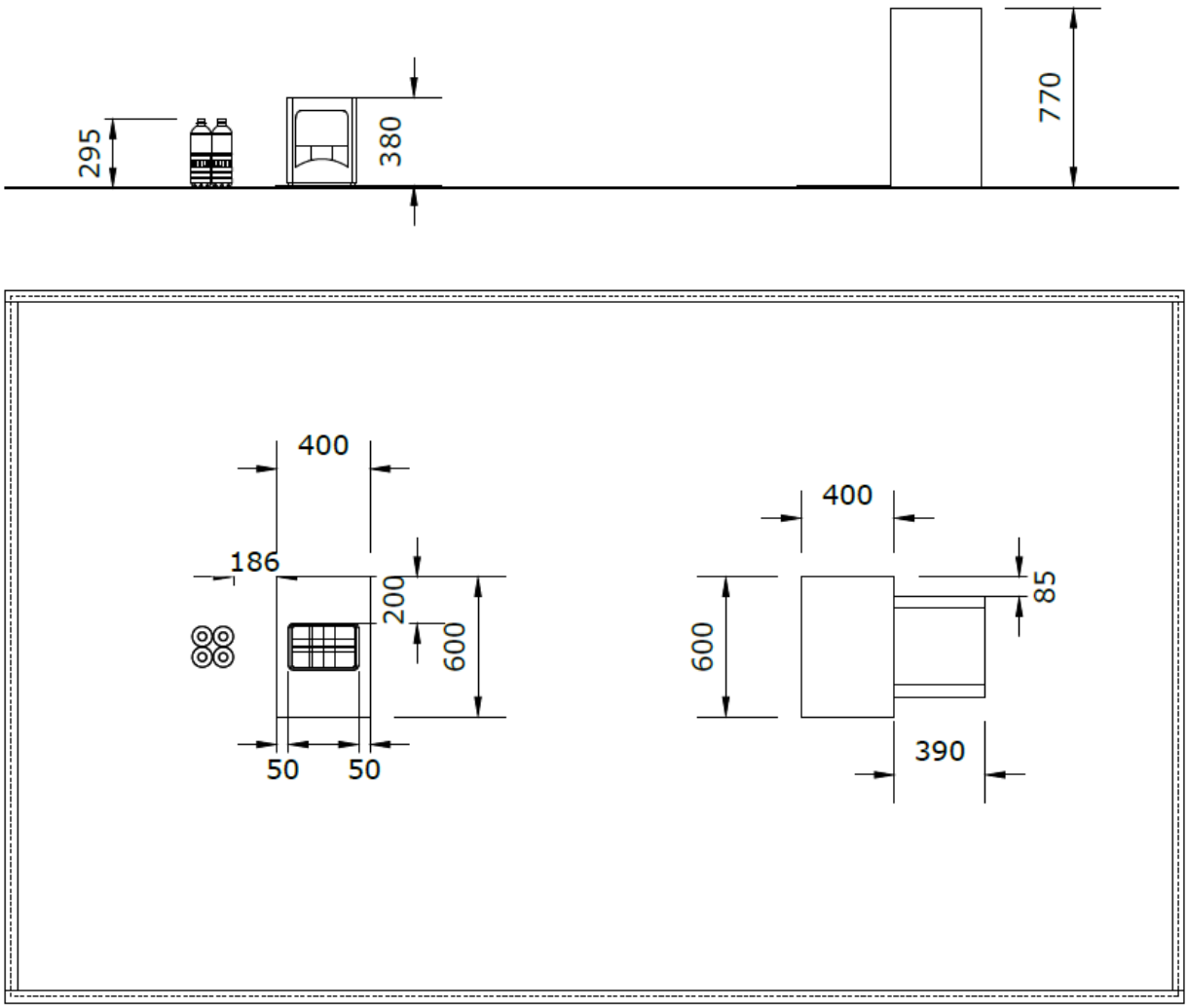

I.5.2 Serving Food

I.5.2.1 Task infrastructure

Units	Object description	Details / Model	Source	Provided by CYBATHLON
1	Shelving unit, with front door		custom made	
3	Cup hinge		OPO	
1	Flap hinge left		OPO	
1	Flap hinge right		OPO	
1	Door handle	Bagganäs	IKEA	
1	Frying pan blue handle	365+, 28cm,	IKEA	
1	Casserole dish	Koncis, 34x24cm	IKEA	
1	Table	Sandsberg, 110x67cm	IKEA	
9	Lacrosse ball, red	to be coloured by hub	CROSS EQUIP	To local hubs only

I.5.2.2 General task set-up

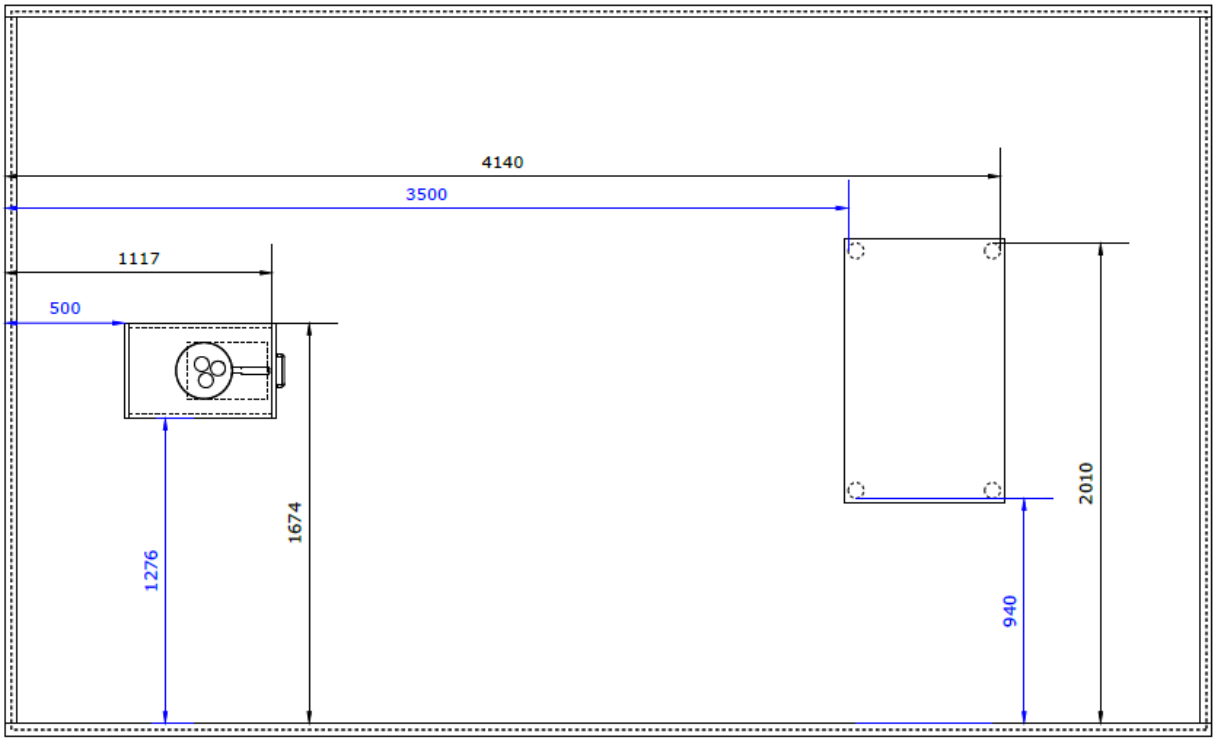

I.5.2.3 Infrastructure dimensions

Change log: new height of shelf in oven object


770
362
40
16
34
690
750

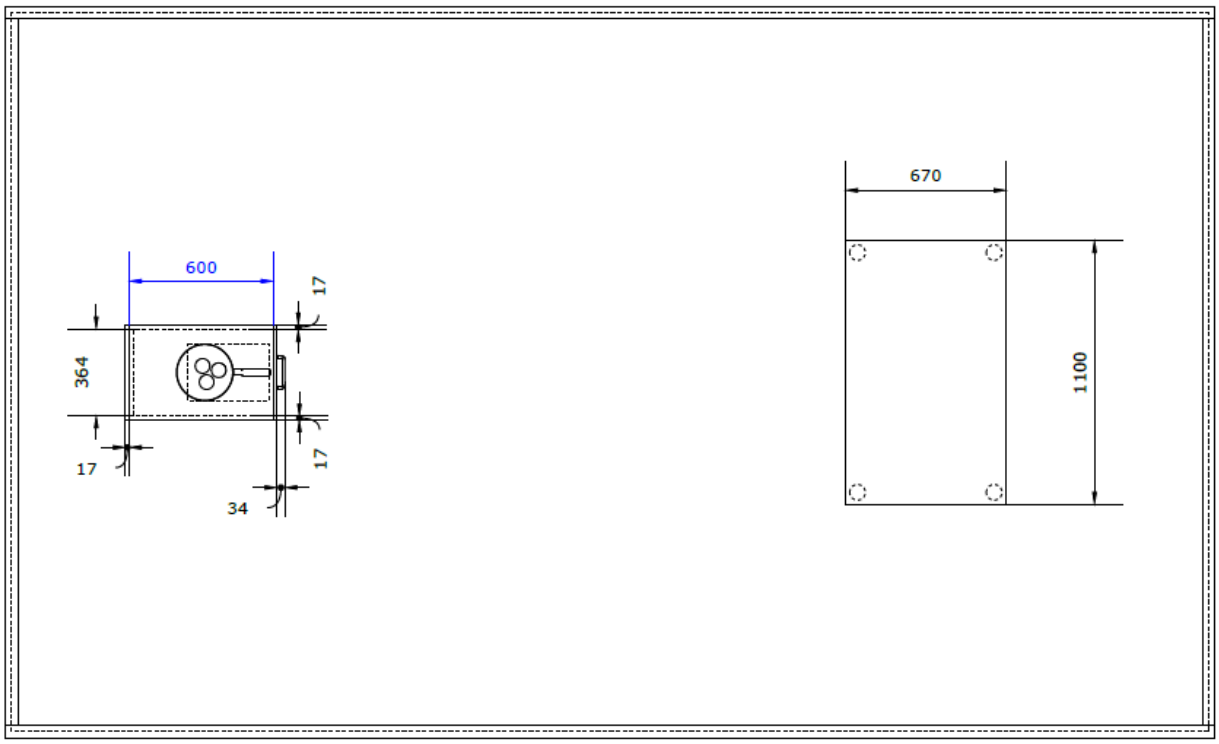
600
17
364
17
17
34
670
1100

I.5.2.4 Hinges – assembly information

The hinges are mounted as presented in the picture. The positions of the hinges can be taken from the CAD model.

I.5.3 Storing Dishes

I.5.3.1 Task infrastructure

Units	Object description	Details / Model	Source
1	Shelving unit	Kallax 1x4	IKEA
1	Insert with 2 drawers	Kallax, black or black-brown	IKEA
1	Cutlery tray	wooden rails, 2 rails 10x10mm inserted in drawers to third the space lengthwise	custom made
1	Table	Sandsberg	IKEA
1	Plate holder	Rinnig	IKEA
1	Cutlery stand	Ordning	IKEA
1	Plate, blue	365+, 20cm	IKEA
1	Mug, blue	Värdera, 30cl	IKEA
1	Set of knive and spoon, blue	365+	IKEA
1	Pair of chopsticks, blue	Trebent	IKEA

I.5.3.2 General task set-up

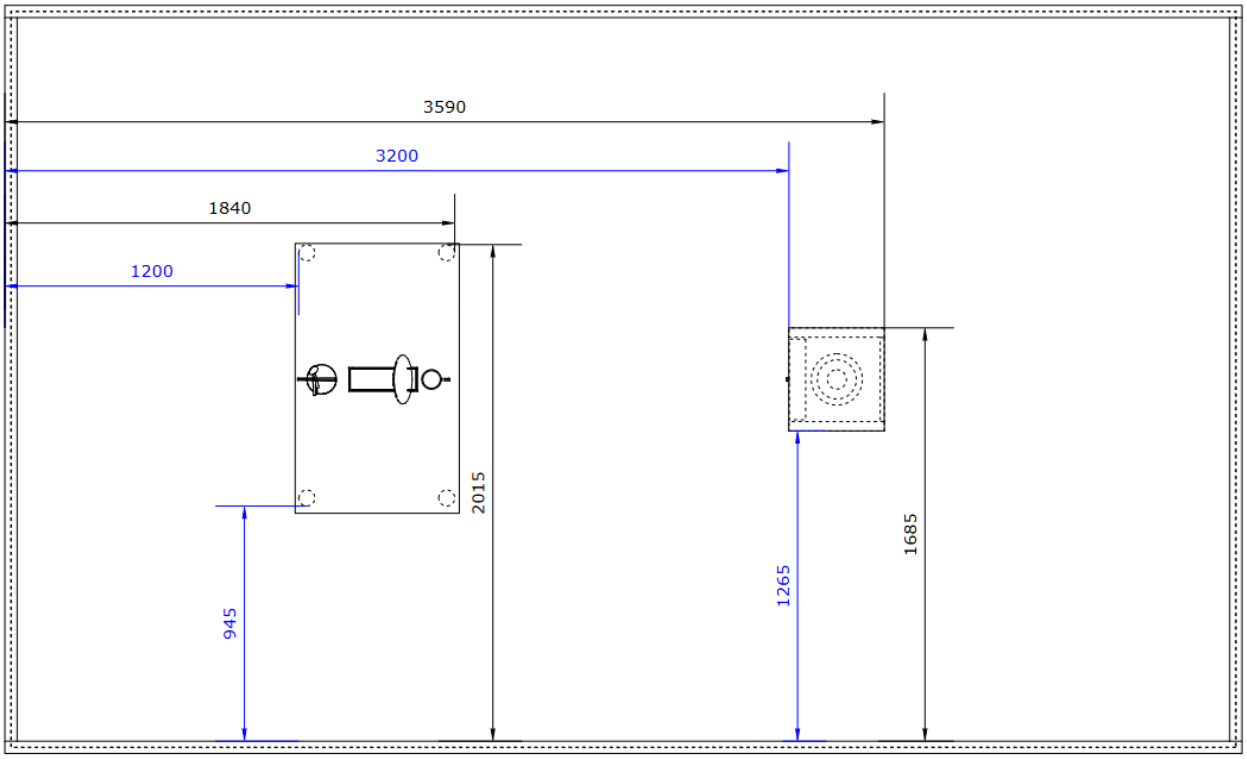

I.5.3.3 Infrastructure dimensions

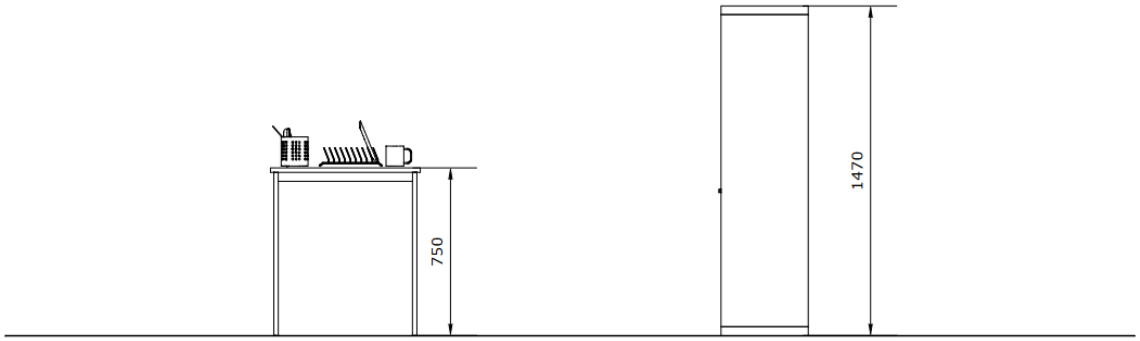

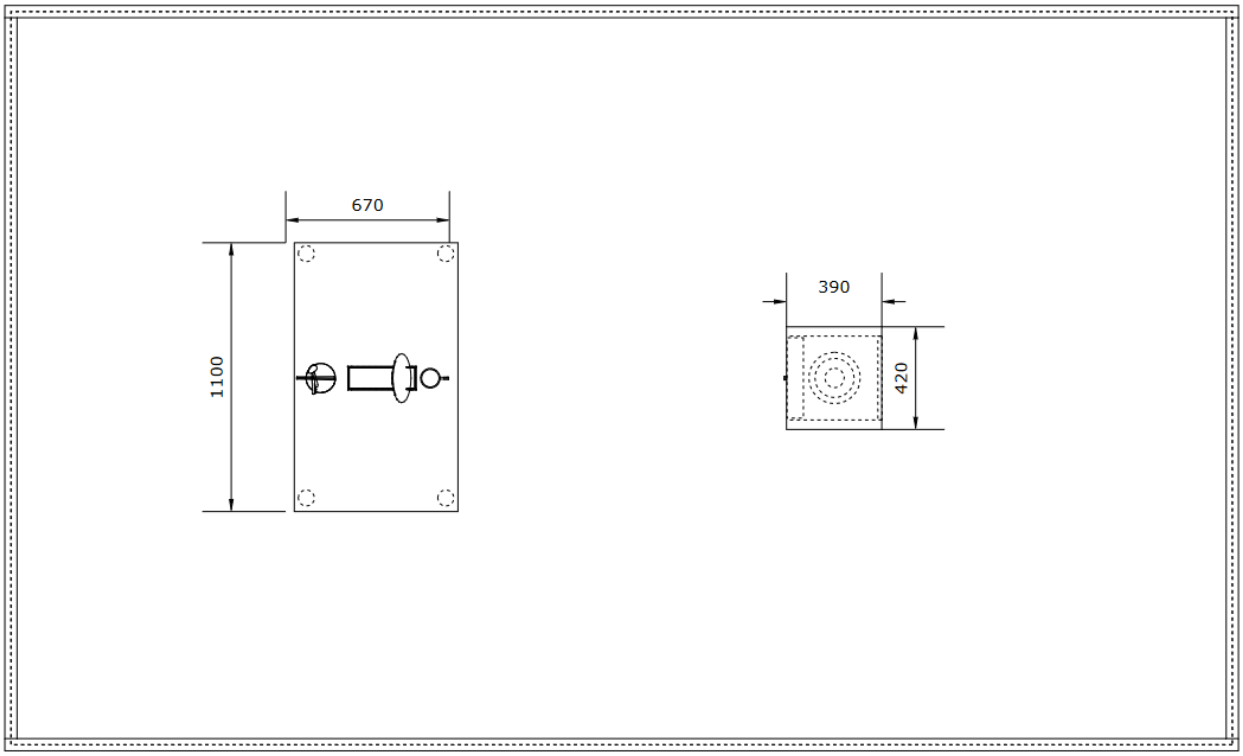

I.5.4 Hanging Laundry

I.5.4.1 Task infrastructure

Units	Object description	Details / Model	Source	Provided by CYBATHLON
1	Hamper	Torkis (beige or grey)	IKEA	
1	T-shirt	SNMP01011-880	Super Natural	To local hubs only
1	Sweater, blue zipper slider and pull tab	SNM013960-W03 size according to the real size of the pilot	Super Natural	To local hubs only
1	Clothesline assembly	holder black, treaded rod M8	custom made	
1	Box for clothespin	Glis, the hinges are located closest to the finish line	IKEA	
1	Clothespin, blue	Wenko Colorado, expected force required for opening is up to 1.5 kg	WENKO	To all registered teams

I.5.4.2 General task set-up

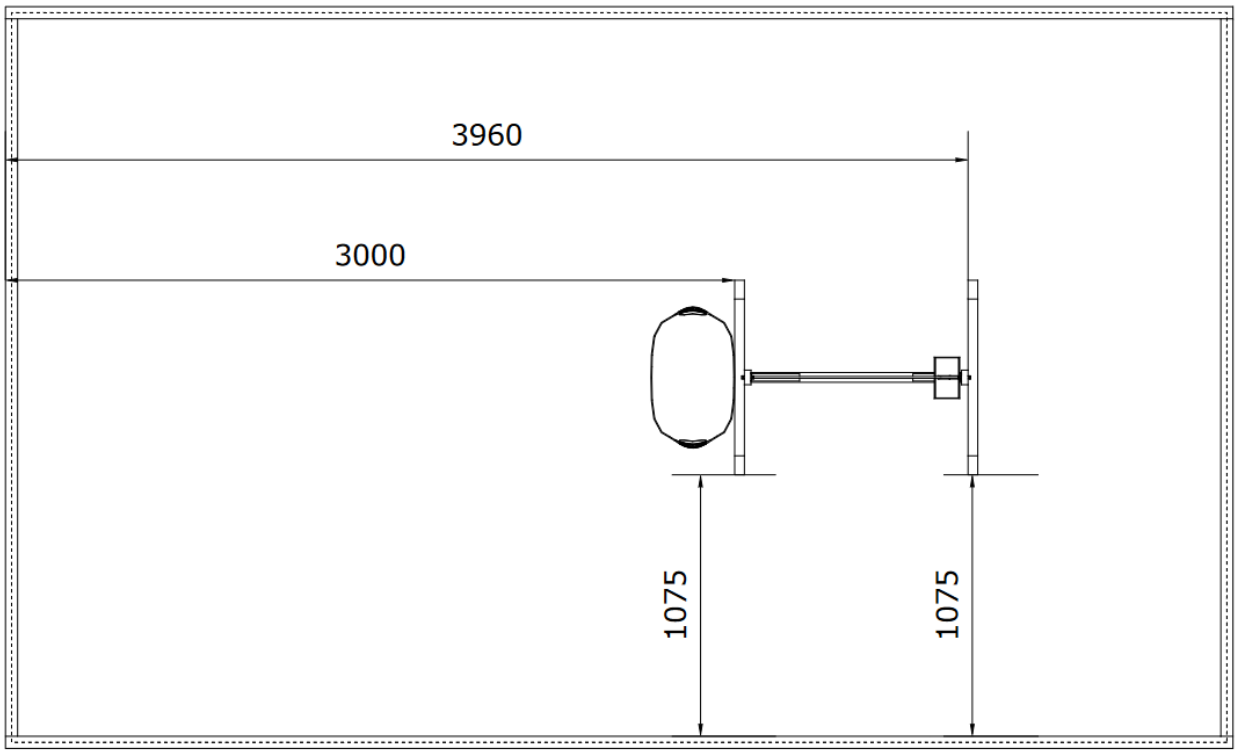

I.5.4.3 Infrastructure dimensions

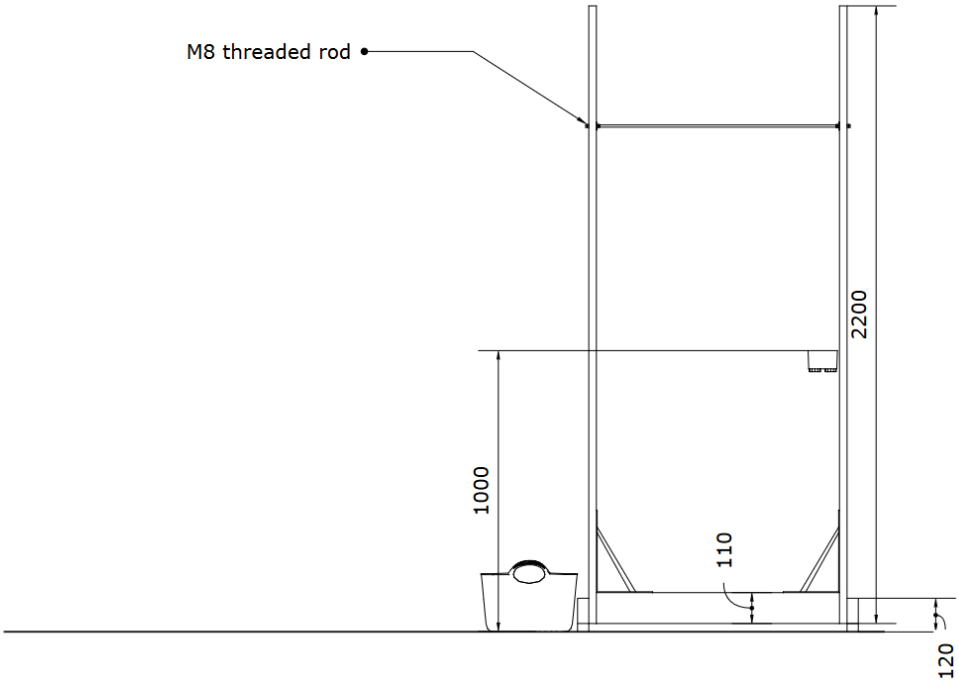

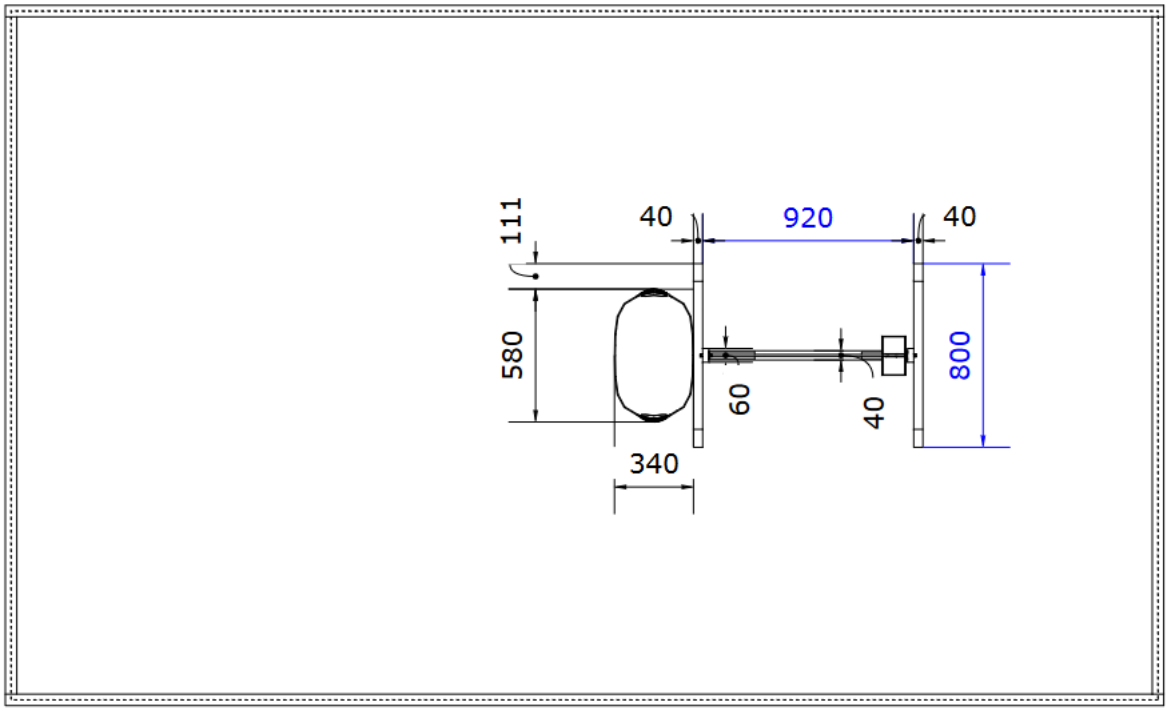

I.5.4.4 Clothesline assembly - assembly information

 General view of the assembly	 Iron bracket for reinforcement
 Threaded rod mountening inside	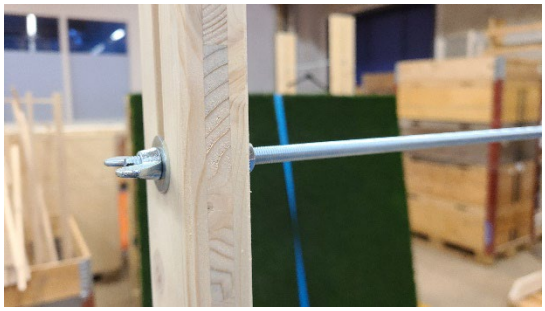 Threaded rod mountening outside

 Box mounted at the sidebar	 Positioning of the clothespin inside the box

I.5.4.5 Sweater – Zipper marks

The upper mark of the zipper is along of the sweater seam at the neck opening.

I.5.5 Do-it-yourself

I.5.5.1 Task infrastructure

Units	Object description	Details / Model	Source	Provided by CYBATHLON
1	Shelving unit	Kallax 2x2, electronics compartment is covered with black fabric on both sides.	IKEA	
1	Shelving unit	Kallax 1x2	IKEA	
1	Hammer, blue handle	Coloured up to the middle of the handle (140mm)	echo ENG	
1	Nail	Art. No. 87.1001.35090, l: 90mm, d: 3.5mm	Hasler	To local hubs only
1	Plate	black, 3D-printed from the file on the CYBATHLON dashboard for registered teams: 20231101_ARM__DIY__PLATE.stl 3mm through-hole, 4mm/10mm for insertion, notch for initial nail position Specific print settings (see below)	PRUSA	To local hubs only
1	Plate holder		custom made	To local hubs only
1	Pliers, blue		BGS	
1	Lightbulb, blue	Star A DécorColor	OSRAM	To local hubs only
1	Bulb electronics set, incl. bulb socket	bulb socket from Max Hauri	custom made	To local hubs only
12	AA batteries		various	
1	Door mat	Österild (large, 60x90cm)	IKEA	

I.5.5.2 General task set-up

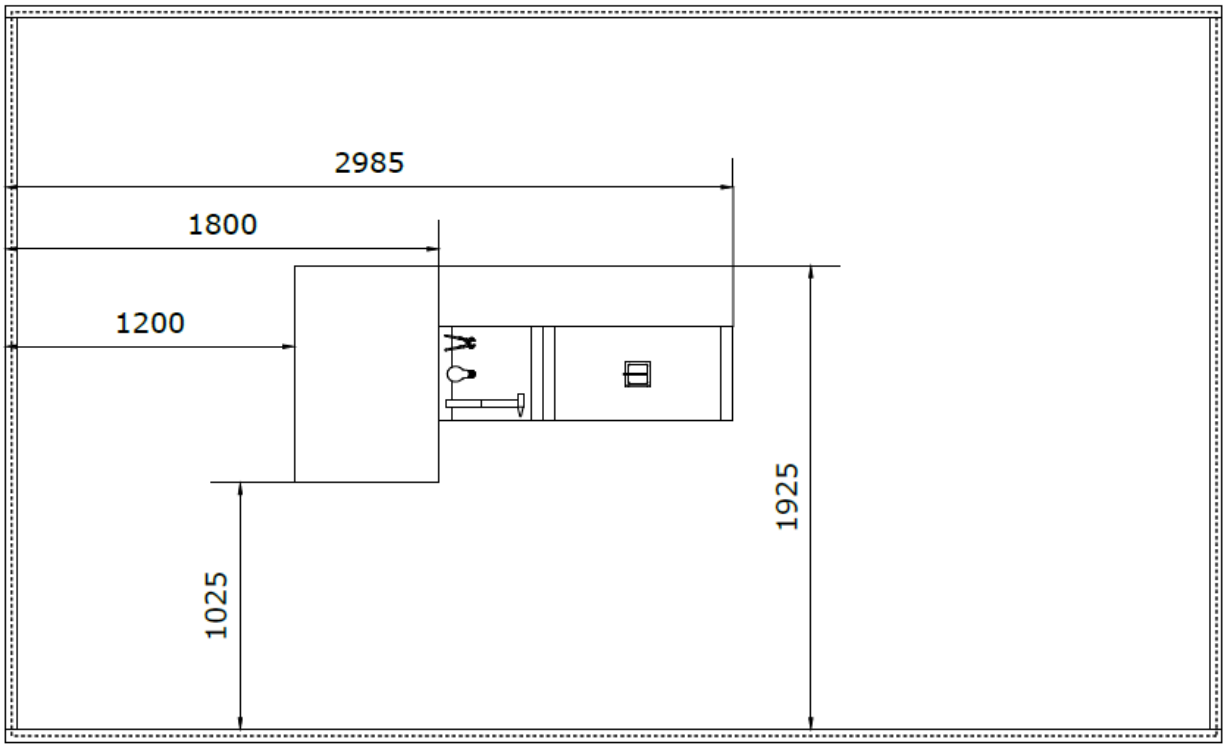

I.5.5.3 Infrastructure dimensions

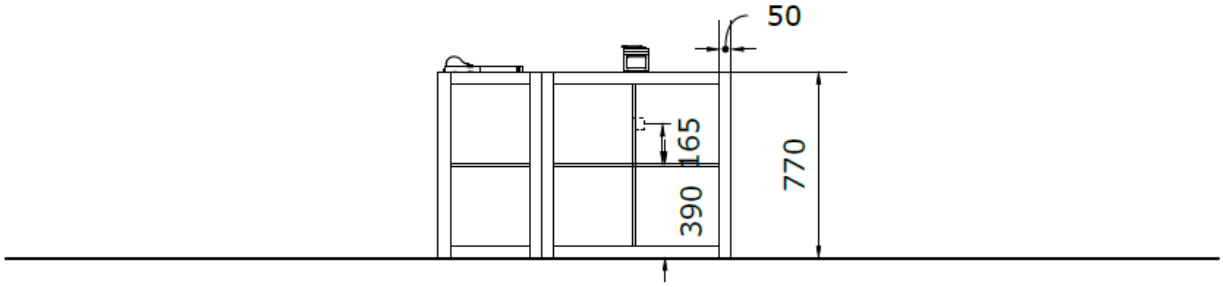

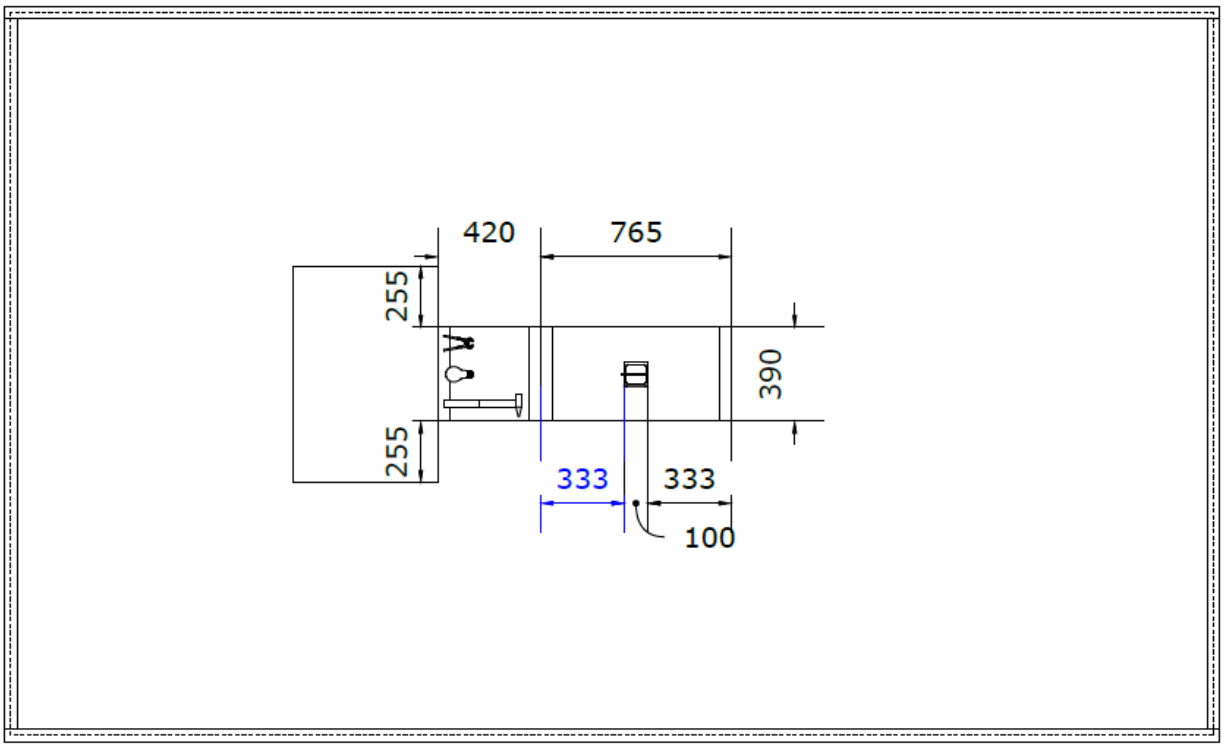

I.5.5.4 Plate –printing specification

Parameter	Value
Nozzle Diameter:	0.4 mm
Filament:	Prusament Galaxy Black
Layerheight(also initial Layer Height):	0.2 mm
Wall loops:	2
Number of bottom/ top layers	10 each
Infill density:	20 %
Infill pattern:	Grid
Printing Temperature:	220 °C
Printbed Temperature:	60 °C
Initial Fan Speed:	0 %
Number of slower layers	1
Print Speed:	50 mm/s

I.5.5.5 Bulb socket to Kallax – assembly information

I.5.5.5.1 Material list

Units	Object description (all from the task material list above)
1	Kallax 2x2 (see material list above)
1	Lightbulb electronics set (see material list above)
Units	**Tools and additional material**
	Keyhole saw or core drill with maximum diameter 40 mm or 1.9/16''
	Any strong adhesives for plastic and wood (epoxy, acrylic, two component adhesives or hot glue)
	Tape
	Black fabric
	Marker

1) Check if Kallax stands the right way up: The longer sides should be top and bottom.
2) Turn Kallax 90°so you can work top down.
3) Mark the middle of the rack area.
4) Drill a hole in the middle of the shelf separator using a core drill or a keyhole saw.
   a) Be careful to drill as orthogonal as possible.
5) Glue the bulb socket into the drilled hole. Make sure that you clean the hole from any dust by blowing it out.
   a) Make sure that you clean the bulb socket (without removing the white reference marks).
   b) To make sure that the bulb socket is concise with the panel, use a tape to fix it.
   c) Let it dry for the recommended time.
6) Flip the Kallax back
7) Test the electronics.
8) Cut two pieces of non-transparent black fabric to the size of the compartment (335mm x 335mm) plus some extra on one side.
9) Attach the fabric on the top side of the of your electronics compartment so it becomes a curtain covering the whole compartment. You can use any means to attach the fabric (double-sided tape, staple gun, adhesives etc.)

 Kallax turned 90° Top surface, rack area	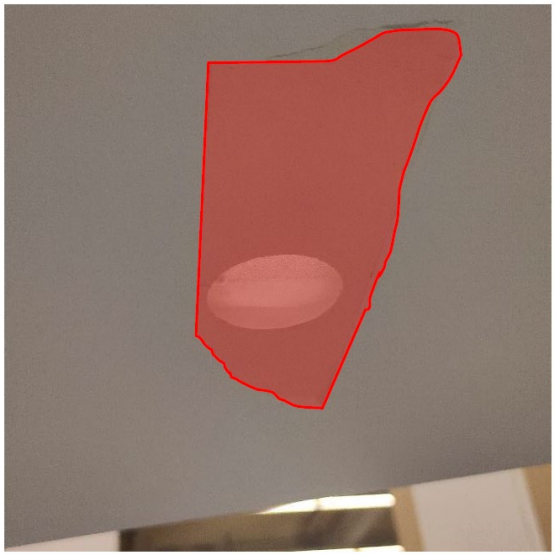 Tape beneath cut hole to limit socket insertion
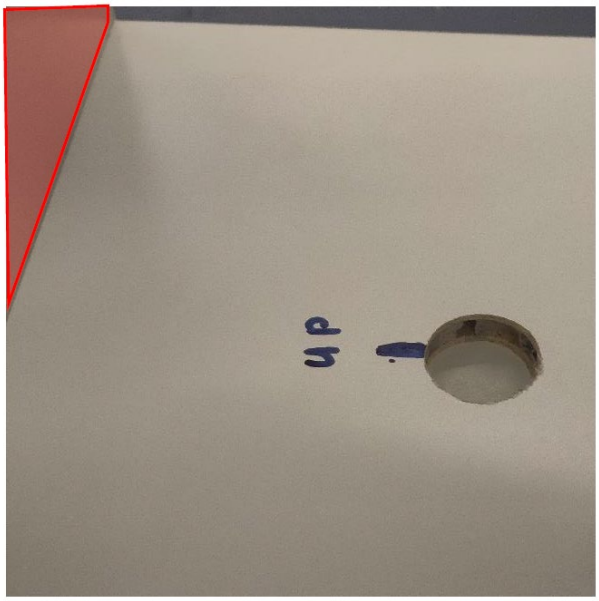 Reference pointing to top board	 Reference on bulb socket aligned with reference next to hole

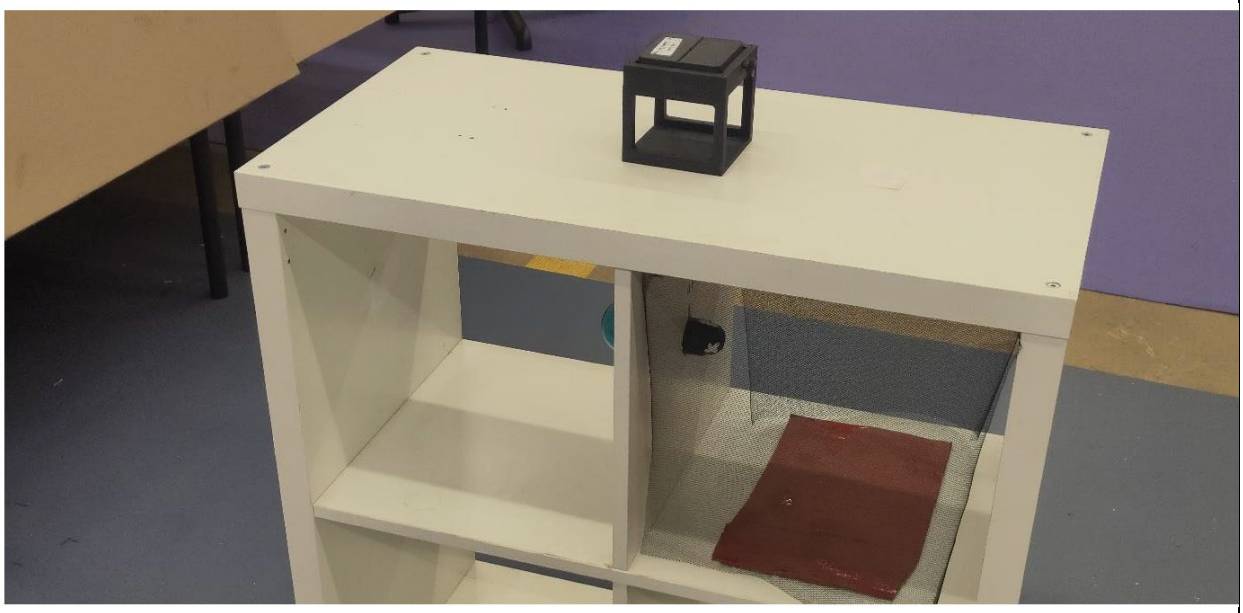

Kallax with space for electronics behind non-transparent curtain and holder for wooden plate on top. (In this figure the curtain is illustrated transparent to show the inside of the shelf)

I.5.6 Containers

I.5.6.1 Task infrastructure

Units	Object description	Details / Model	Source	Provided by CYBATHLON
1	Table	Sandsberg	IKEA	
1	PET bottle, white tranparent (0.5l, filled with red liquid, blue bottle cap)	empty weight (with cap): 26g, filled with 0.5l of red liquid (water-like viscosity, see food colouring): 526g, weight tolerance: +/- 50g	bottleshop	To local hubs only
1	PET bottle, white transparent (0.5l, filled with red liquid, white bottle cap, blue coloured lower body)	empty weight (with cap): 26g, filled with 0.5l of red liquid (water-like viscosity, see food colouring): 526g, weight tolerance: +/- 50g, coloured blue up to 30mm below mounted lid	bottleshop	To local hubs only
1	Bottle cap, blue		CZECH BREWERY SYSTEM	To local hubs only
1	Bottle cap, white		CZECH BREWERY SYSTEM	To local hubs only
1	Jar, white transparent (440ml, filled with red liquid, blue jar lid)	empty weight (with lid): 256g, filled with 0.3l of red liquid (water-like viscosity, see food colouring): 556g, weight tolerance: +/- 50g	Agrimarkt	To local hubs only
1	Jar, white transparent (440ml, filled with red liquid, , blue coloured lower body)	empty weight (with lid): 256g, filled with 0.3l of red liquid (water-like viscosity, see food colouring): 556g, weight tolerance: +/- 50g, coloured blue up to 30mm below mounted lid	Agrimarkt	To local hubs only
1	Jar lid, blue		Agrimarkt	To local hubs only
1	Jar lid, white		Agrimarkt	To local hubs only
4	Food colouring	red, ca. 5 drops	TRAWOSA, or similar	

I.5.6.2 General task set-up

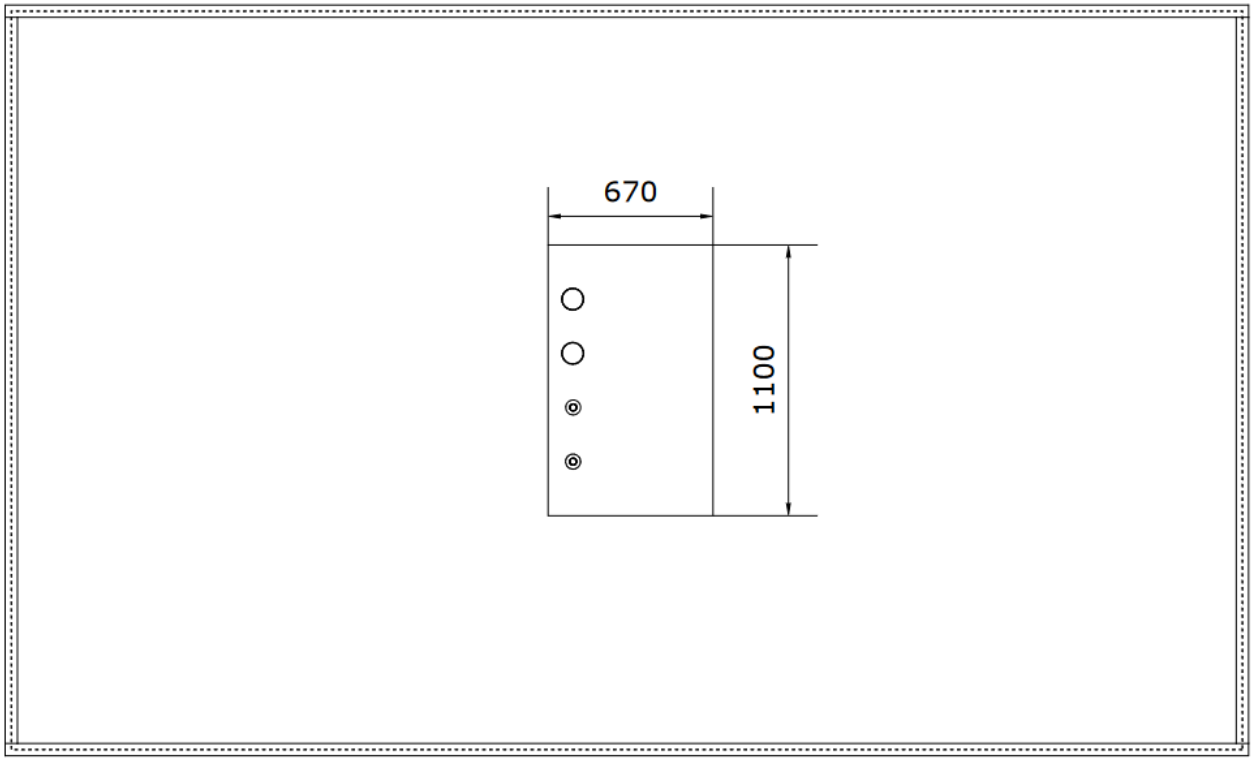

I.5.6.3 Infrastructure dimensions

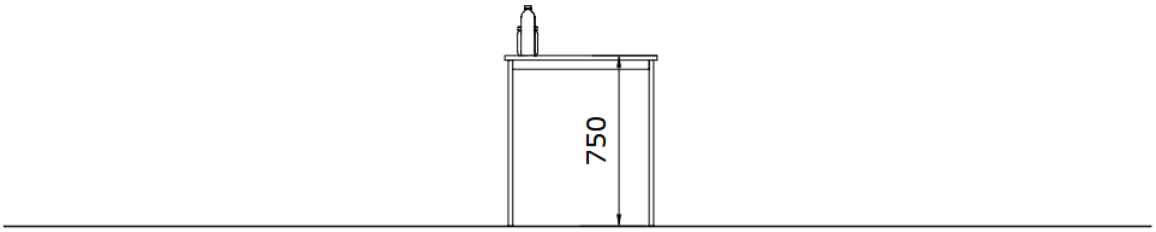

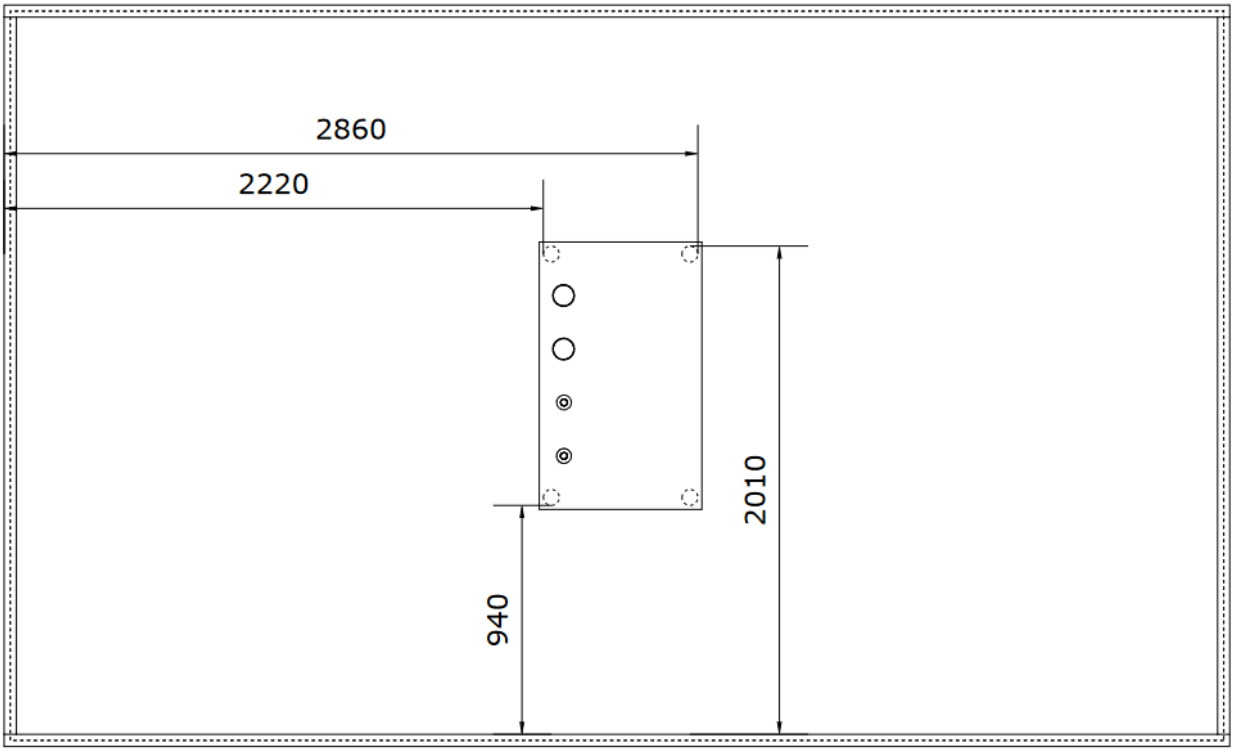

I.5.7 Haptic Bag

I.5.7.1 Task infrastructure

Units	Object description	Details / Model	Source	Provided by CYBATHLON
1	Table	Sandsberg	IKEA	
1	Haptic bag - frame		custom made	
2	Haptic bag – brush, blue	standard strip brush, STL 6001-494992, body: PVC deep black, fiber: PA6 signalblue 0 30, total length: 250mm, working length: 240mm, rows: 1, fiber hight 100mm	MINK	To local hubs only
1	Haptic bag – fabric, blue	Brugnoli Roche jersey royalblau, product out of stock, subject to change	fwd	To local hubs only
4	Low compliance object	grey, 3D-printed from the files on the CYBATHLON dashboard for registered teams: 20220930_ARM__HAP-TIC_BAG__LOW_COMPLI-ANCE_CUBE.stl 20220930_ … _CYLINDER_1.stl 2 3D-prints each	PRUSA	

4	High compliance object	foam (RG50), cube, cylinder	custom made	1 of each form to all registered teams and 1 of each form to all local hubs
1	Frame (2x4)	for presentation of target and selected objects The numbers 1 to 4 from left to right are written on the target slots. 3D-printed from the file on the CYBATHLON dashboard for registered teams: 20240425_ARM__HAP-TIC_BAG__DISPLAY_FRAME.stl	custom made	

I.5.7.2 General task set-up

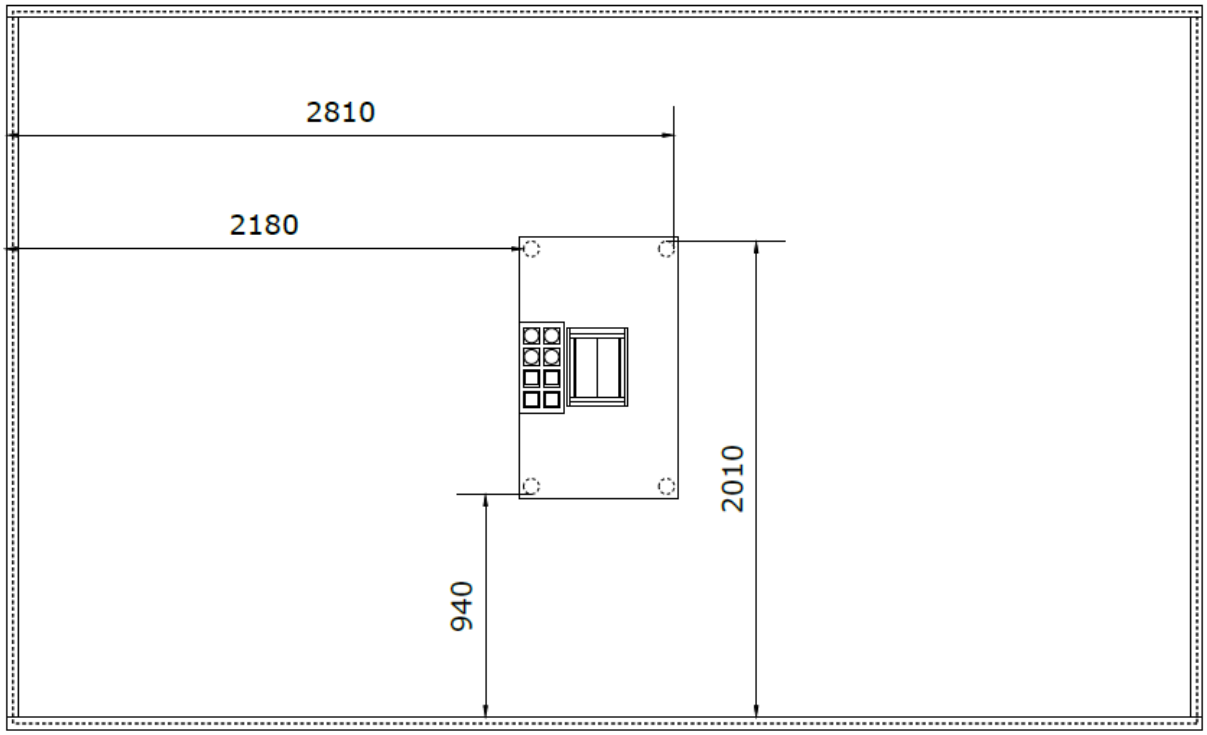

I.5.7.3 Infrastructure dimensions

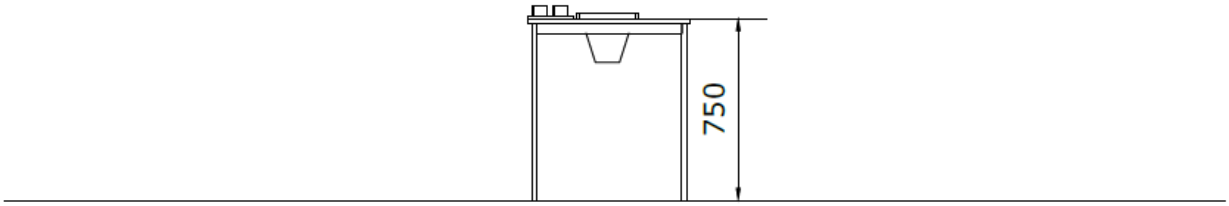

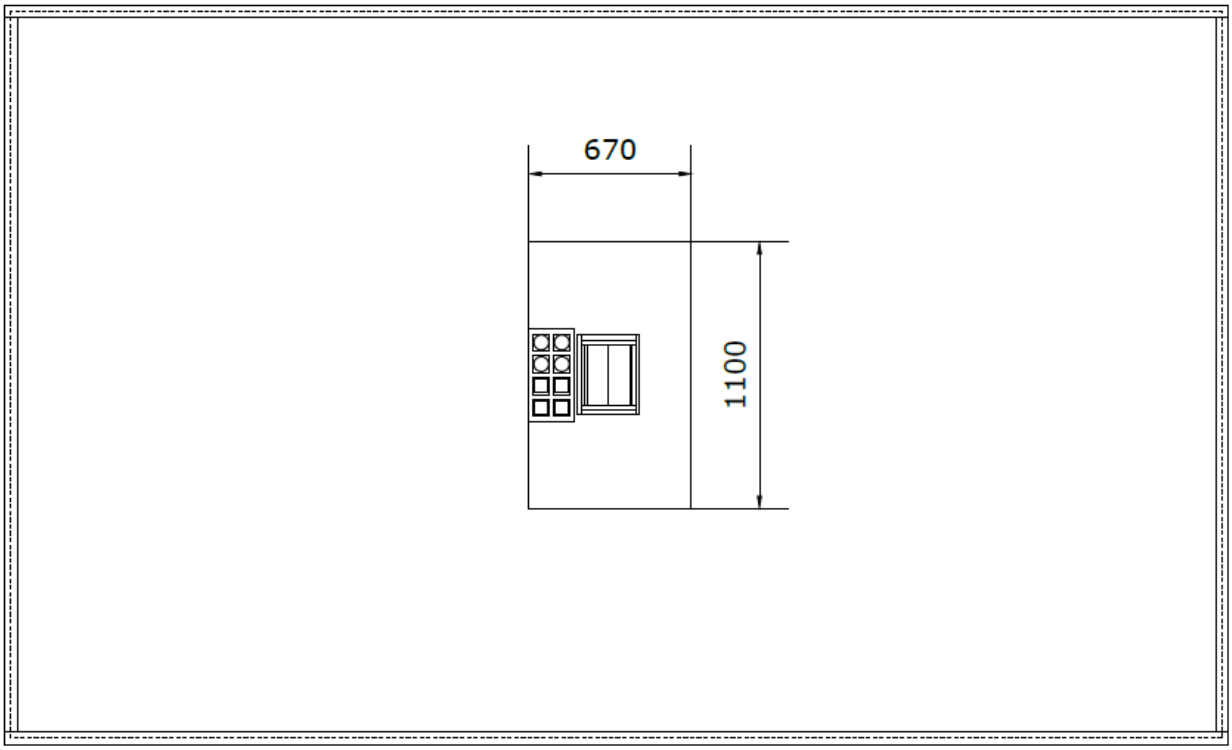

I.5.7.4 Haptic bag - fabric manufacturing information

I.5.7.4.1 Material list

Units	Object description	Details / Model	Source
10	Flange head screws	PWA 2.5x10mm (e.g., Bossard, Art. Number 3359679)	
1	Screwdriver	Torx or Philips	
1	Tape	-	
1	Frame	black, 3D-printed from the files on the CYBATHLON dashboard for registered teams: 20230829_ARM__HAPTIC_BAG__FIXING_BAR.STL 20230829_ARM__HAPTIC_BAG__FRAME.STL	PRUSA
2	Fixation bar	3D printed	

1	Jersey fabric		Fabric Wholesale Direct
1	2.5 mm drill		
1	Needle and string, blue	coloured string	

I.5.7.4.2 Preparation

I.5.7.4.2.1 Fabric manufacturing

The fabric is cut and folded according to the cutting pattern:

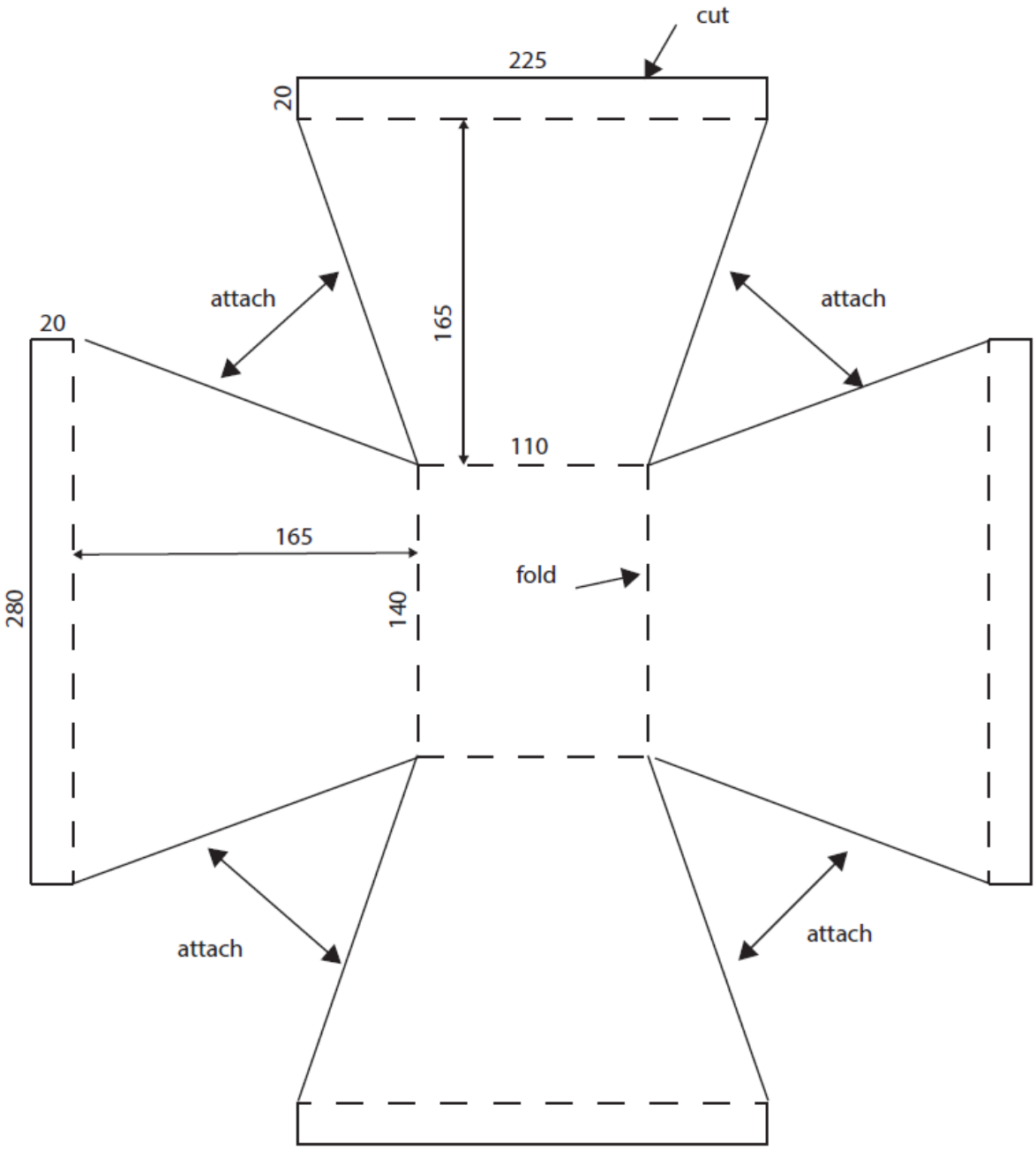

The marked edges are then stitched with a overlock stitch. This can be done manually or with a sewing machine.

Manual overlock stich.

This side should be on the outside of the bag ("bad" side)!

I.5.7.4.2.2 Brush holder

Three holes must be drilled in each brush holder according to the sketch.

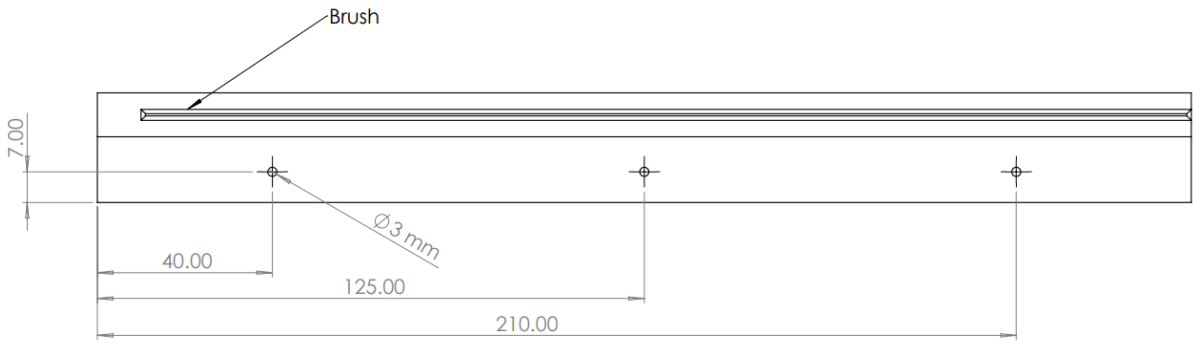

I.5.7.4.3 Assembly

- 3D printing: ~36 hours
- Assembly: ~30 – 40 min

0		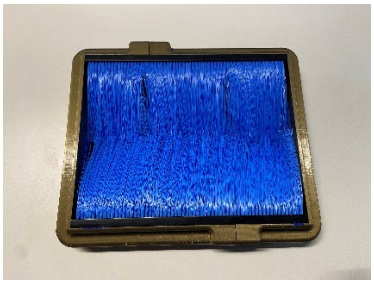

1		Grab one of the shorter ends of the haptic bag, take the fixing bar (3d printed) and press it with the fabric behind it into the opening of the haptic bag frame (as shown in the picture). **Take care that the "bad" side of the stitching should be outside of the bag!**
2		It is okay if some of the fabric sticks are out at the top. Now screw in the fastening screw on the left and on the right side of the fixing bar.
3		Do the same for the second side. Now, stick the two haptic frames together and if necessary, put some tape on the connection to hold the frame in place during the assembly.
4	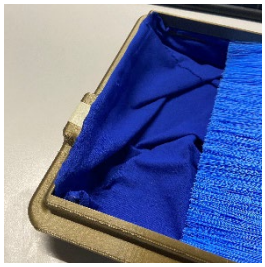 	Grab the longer side of the bag and place it over the edge of the frame (left picture). Then, place the brush holder with the brushes pointing towards the middle of the bag, so that the fabric gets clamped between the frame and the brush holder (right picture). Hold it in place with your hand.

5	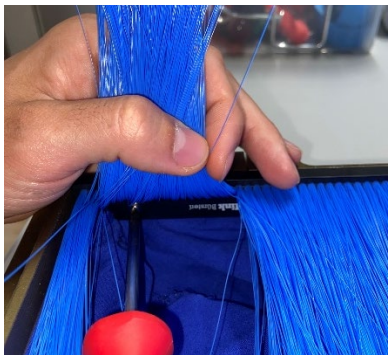	Now, screw in the fastening screws through the pre-drilled hole in the brush holder, through the fabric into the frame. Do this for all three screws. Repeat step 4 & 5 for the second brush holder.
6		Place your haptic bag into the opening of your table. Screw the frame into the table by using two 3 mm wood screws.

I.5.8 Hot Wire

I.5.8.1 Task infrastructure

Units	Object description	Details / Model	Source	Provided by CYBATHLON
1	Conductive Wire	With white isolated start and end streights	custom made	
1	Handle with loop, blue	handle	PB SWISS TOOLS	To local hubs only
1	Set of electronics	As a local hub please contact the CYBATHLON office regarding the organisation of the electronics in this task	custom made	To local hubs only
1	Hot wire base	black	custom made	

I.5.8.2 General task set-up

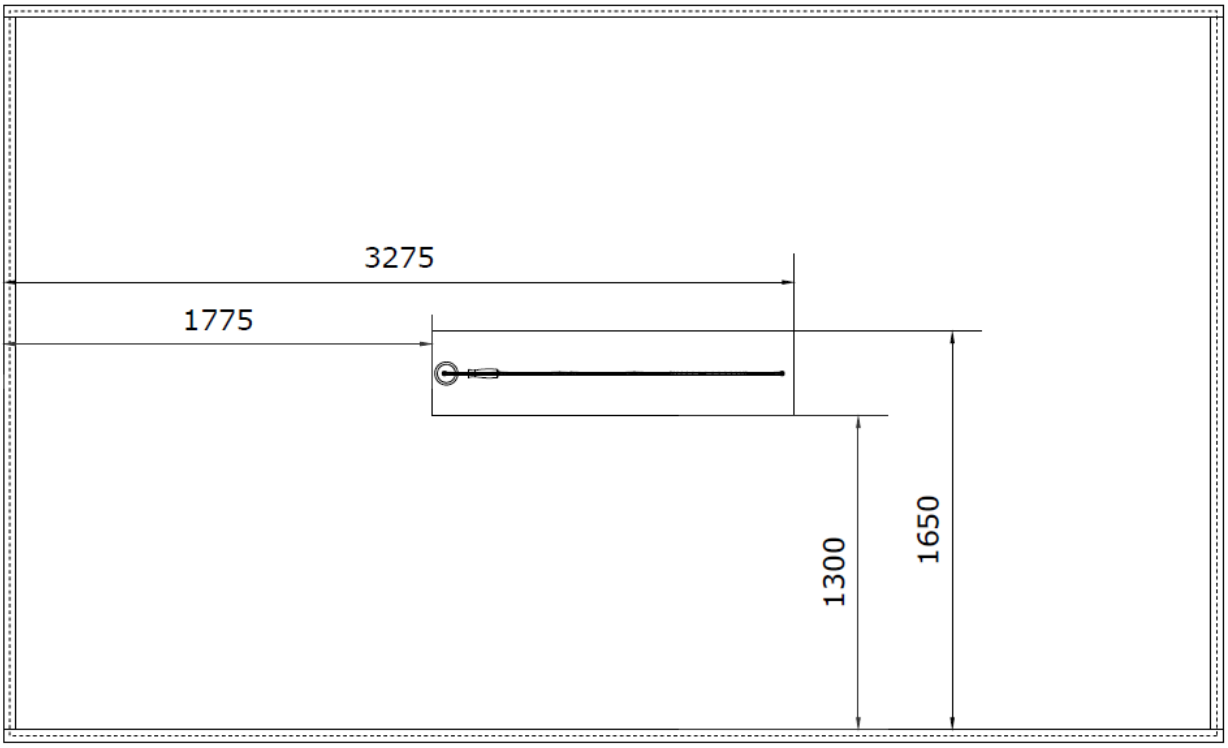

I.5.8.3 Infrastructure dimensions

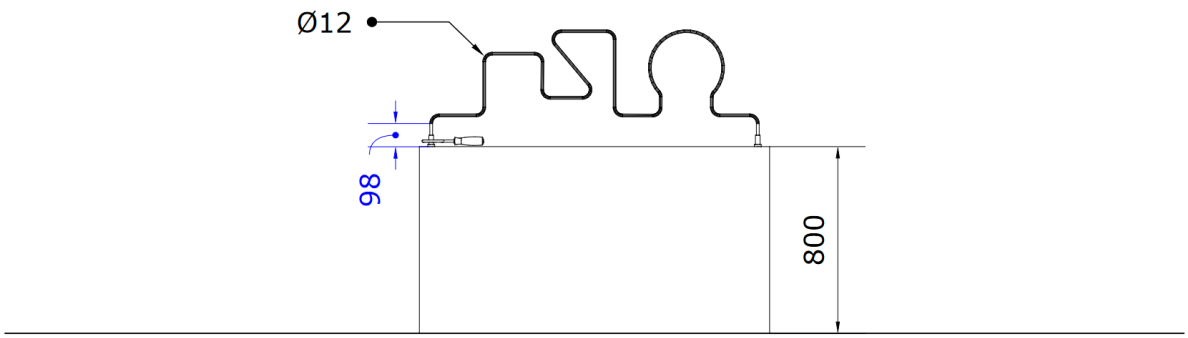

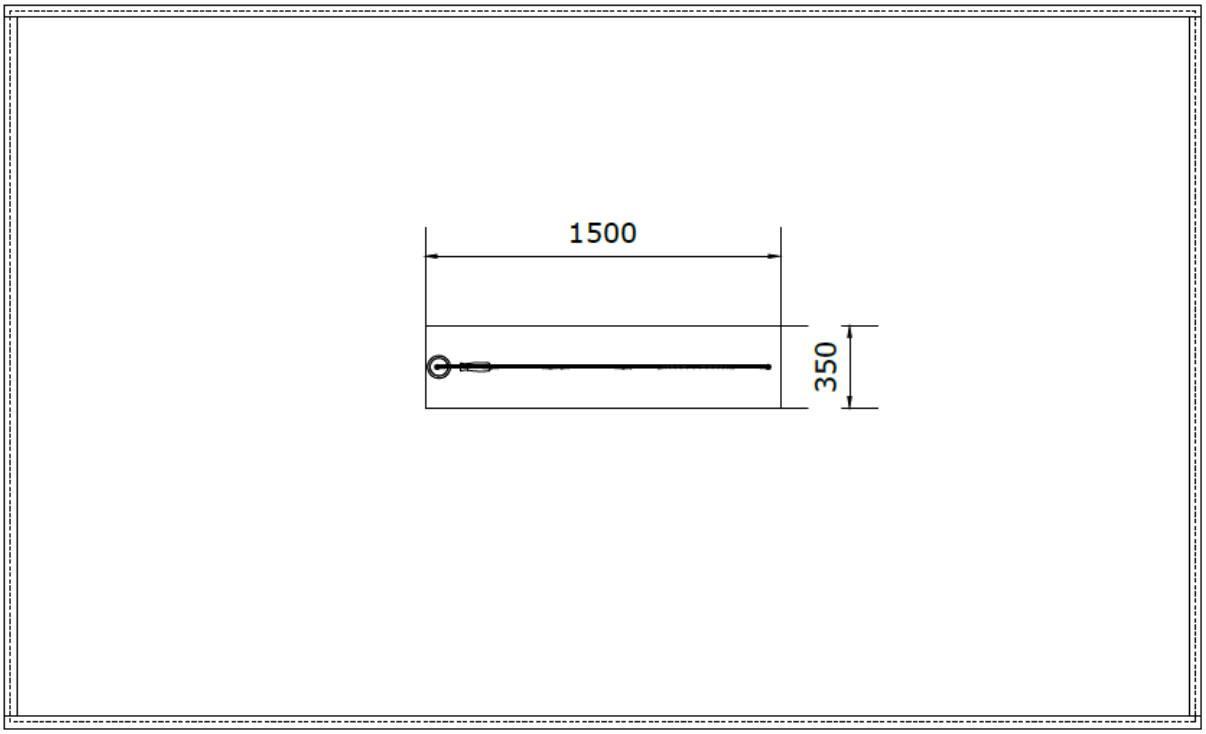

I.5.8.4 Wire (manufacturing information)

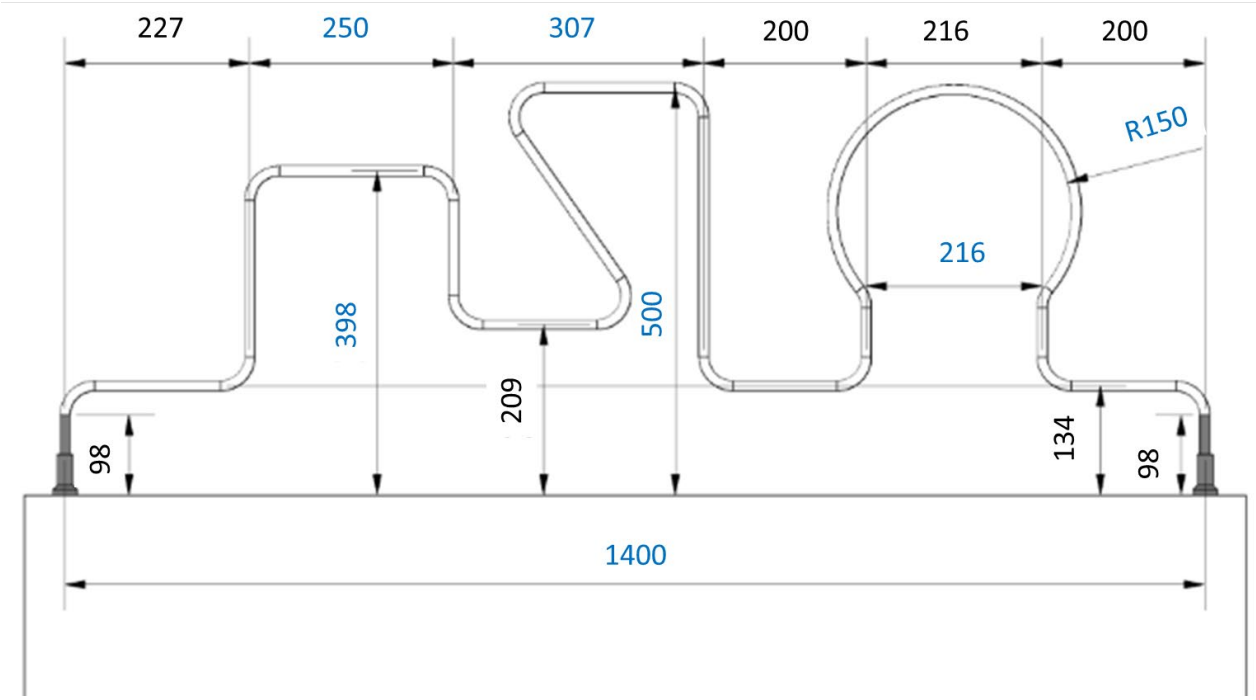

I.5.8.5 Handle with loop (manufacturing information)

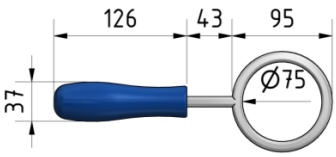

I.5.9 Stacking

I.5.9.1 Task infrastructure

Units	Object description	Details / Model	Source
1	Table	Sandsberg	IKEA
6	Plastic cup, blue	Kalas, to be coloured by hub	IKEA
1	Chair	Adde, black	IKEA
1	Door mat	Österild (large, 60x90cm)	IKEA

I.5.9.2 General task set-up

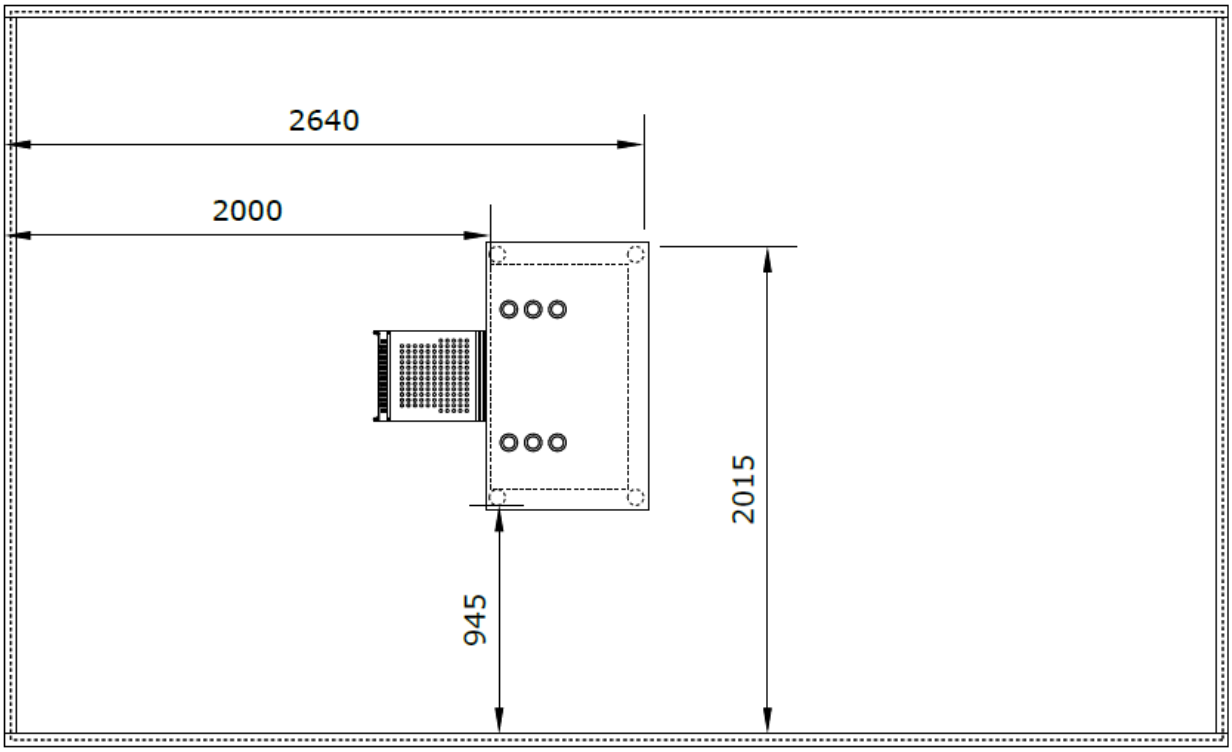

I.5.9.3 Infrastructure dimensions

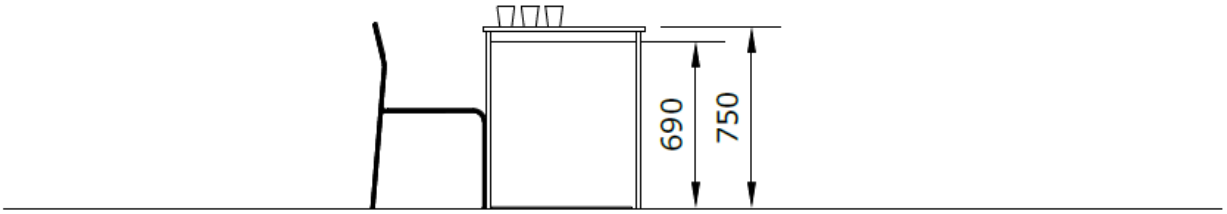

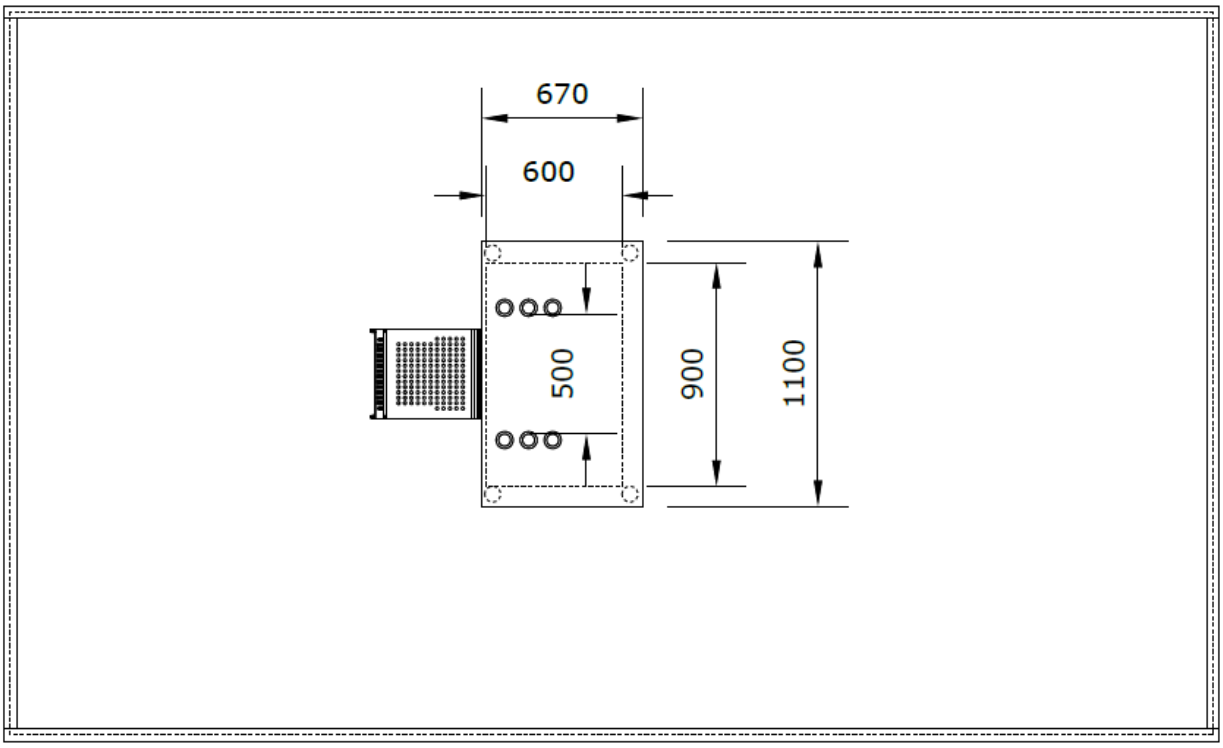
670
600
500
900
1100

I.5.10 Clean Sweep

I.5.10.1 Task infrastructure

Units	Object description	Details / Model	Source	Provided by CYBATHLON
2	Table	Stensele,	IKEA	
1	Transparent box, blue	Glis, the lid is removed, the hinges are located closest to the finish line	IKEA	
4	Cube, attached to the table	white, 3D-printed from the files on the CYBATHLON dashboard for registered teams: 20220930_ARM__CLEAN_ _SWEEP_CARD_CUBE.stl 20220930_ ... _CARD_KEY_CUBE.stl 20220930_ ... _LEGO_CUBE.stl 20220930_ ... _PEN_CUBE.stl	PRUSA	
1	LEGO Block	brown, LEGO	KLICK-BRICKS	To local hubs only
1	Key, blue	KABA 8	KABA	To local hubs only
1	Credit Card, blue	w: 85 mm, l: 54 mm, h: 0.8 mm	ETH Print and Publish	To local hubs only
1	Marble, blue	d: 14-17 mm	Similar to: Jugglux	To local hubs only
1	LEGO Block, blue	LEGO	KLICK-BRICKS	To local hubs only

I.5.10.2 General task set-up

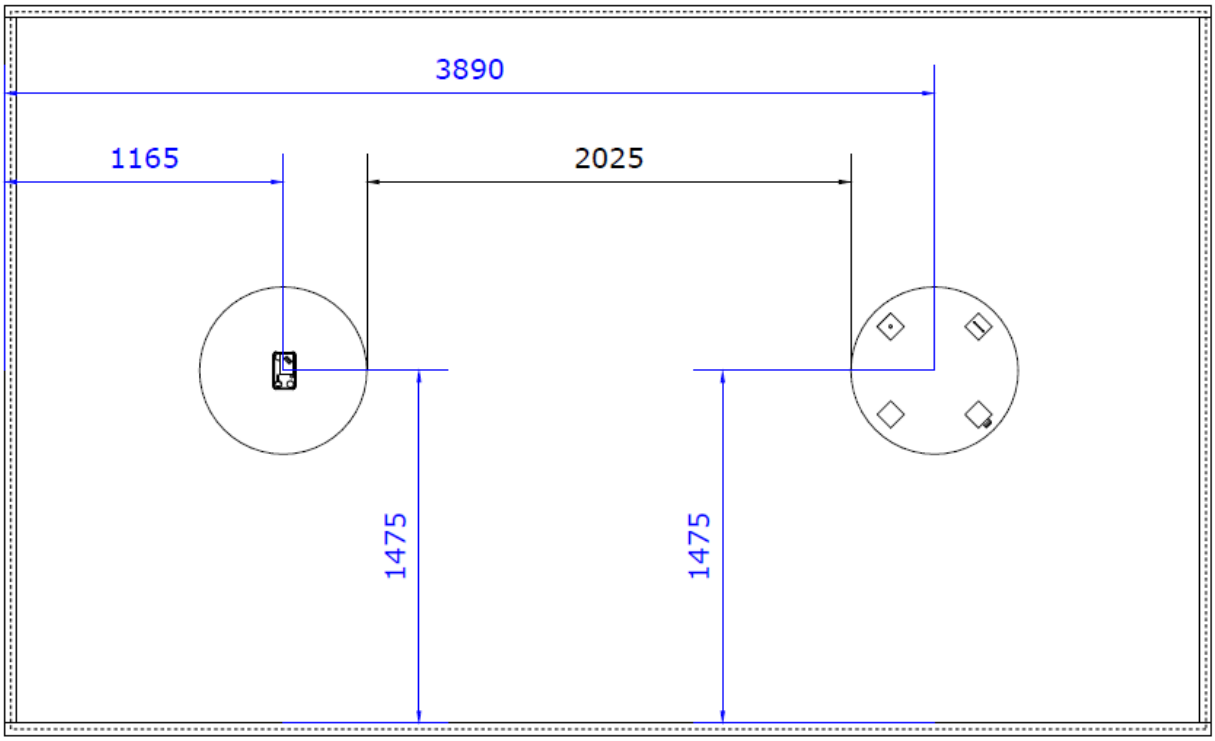

I.5.10.3 Infrastructure dimensions

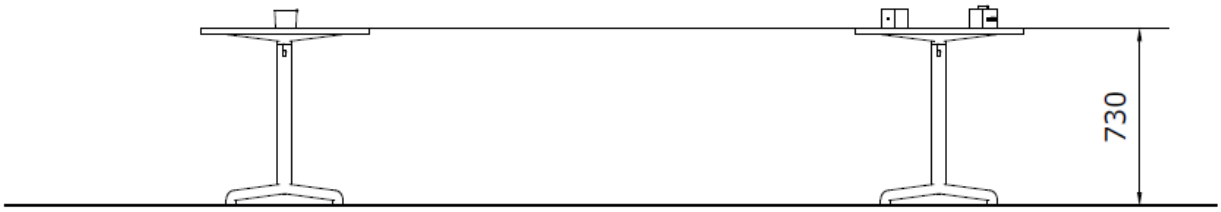

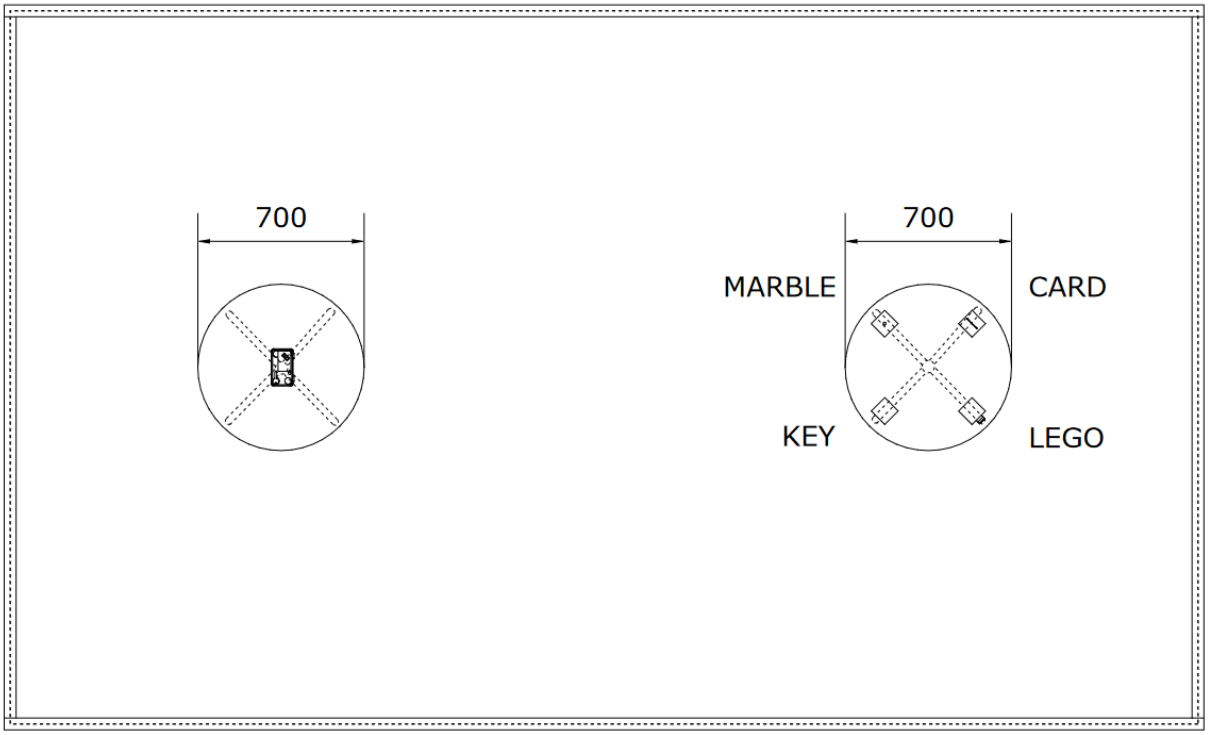
700
700
MARBLE
CARD
KEY
LEGO

I.6 LEG

I.6.1 Balance Beam

I.6.1.1 Task infrastructure

Units	Object description	Details / Model	Source
3	Beam, 2 with blue marks	wood, top surfaces with increased friction and painted grey respectively blue marks (with increased friction) at entry zone on two of the beams	custom made
2	Bucket		PACKSTAR

I.6.1.2 General task set-up

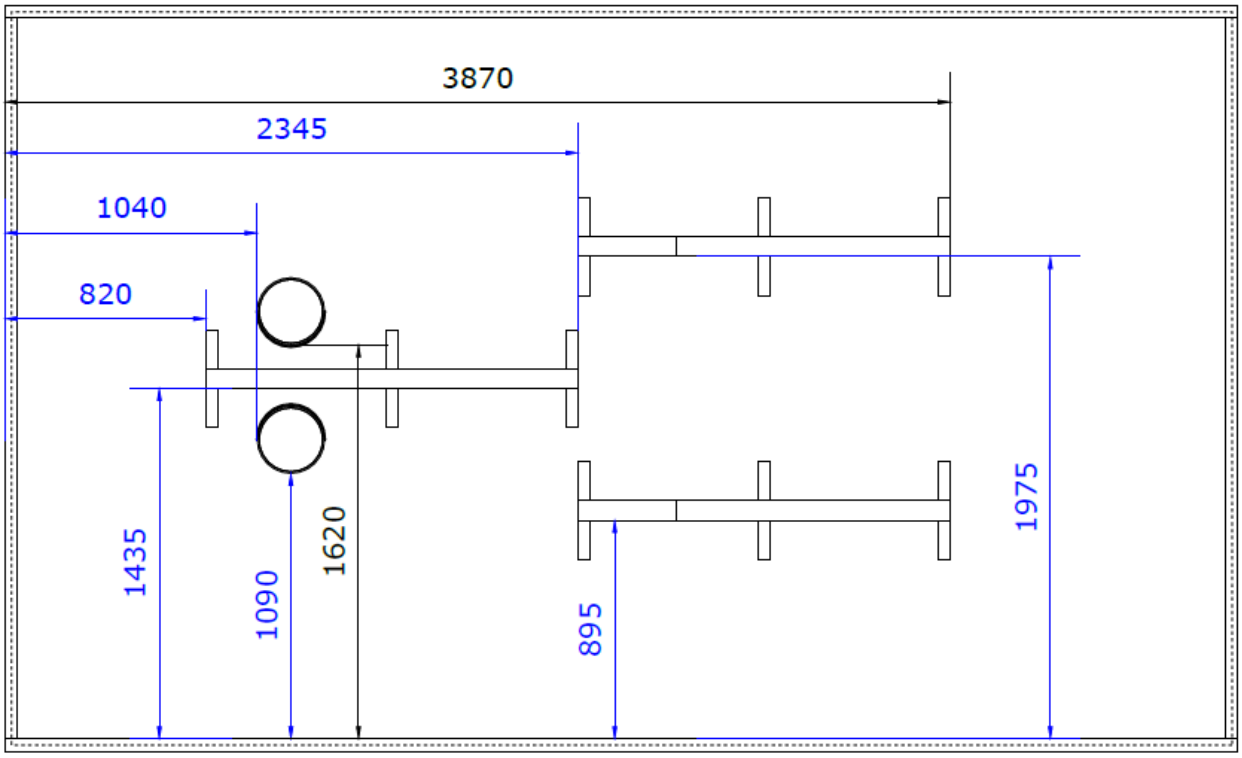

I.6.1.3 Infrastructure dimensions

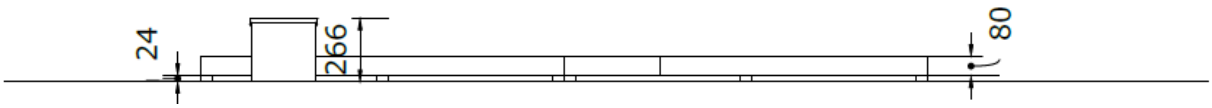

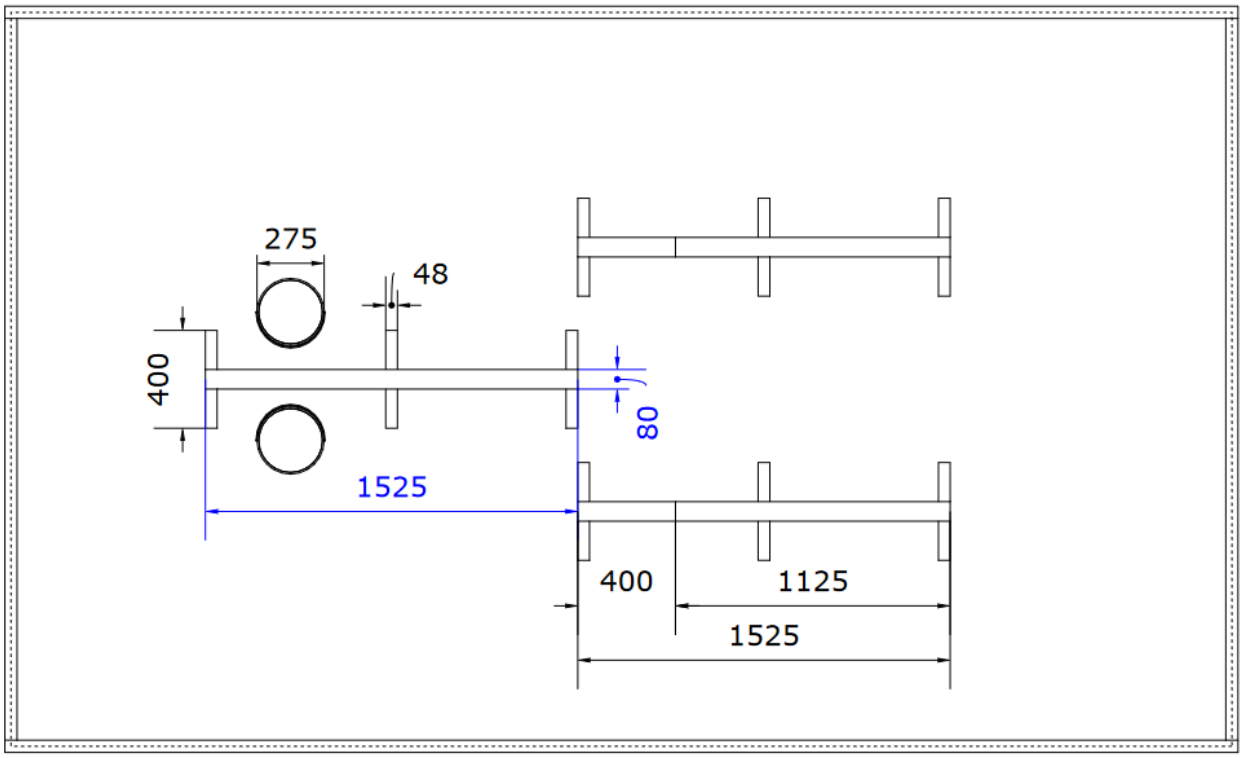
275
48
400
80
1525
400
1125
1525

I.6.2 Stairs

I.6.2.1 Task infrastructure

Units	Object description	Details / Model	Source
1	Stairs	wood, optionally with recessed checker plate edge protection on each step (30-50cm, max. thickness of 5mm), CYBATHLON uses multi-layer solid wood	custom made
2	Handrail (1 for each side)	steel	custom made
12	Crate, red	Knagglig, 46x31x25cm, bottoms removed	IKEA
2	Side table	Lack (black or black brown)	IKEA
1	Tray	Ostbit, 20x28cm	IKEA
1	Saucer	365+	IKEA
1	Espresso cup, red	365+	IKEA
1	Plastic cup, red	Kalas, to be coloured by hub	IKEA

I.6.2.2 General task set-up

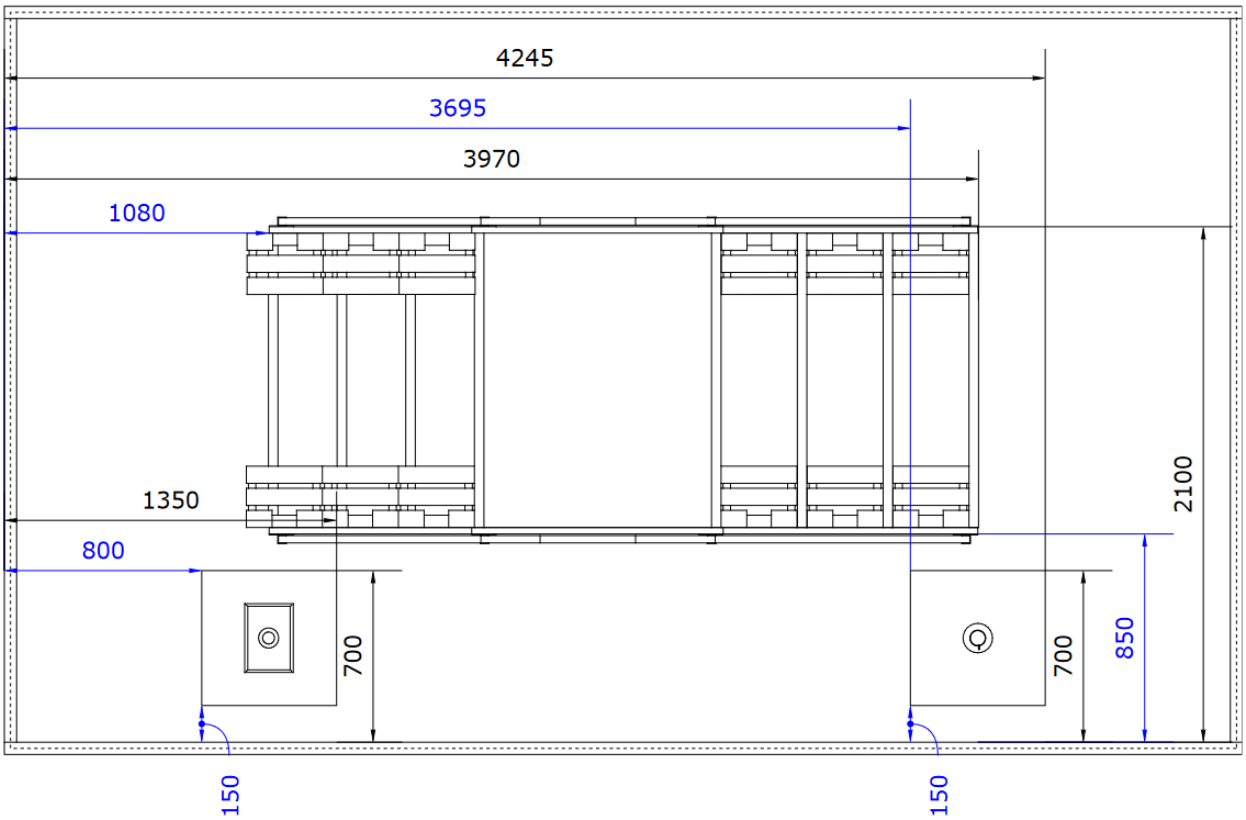

I.6.2.3 Infrastructure dimensions

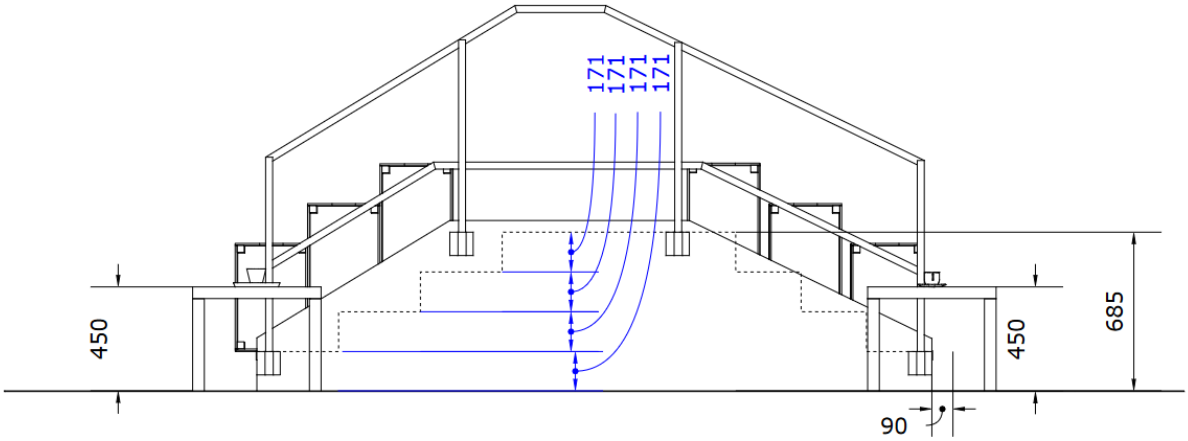

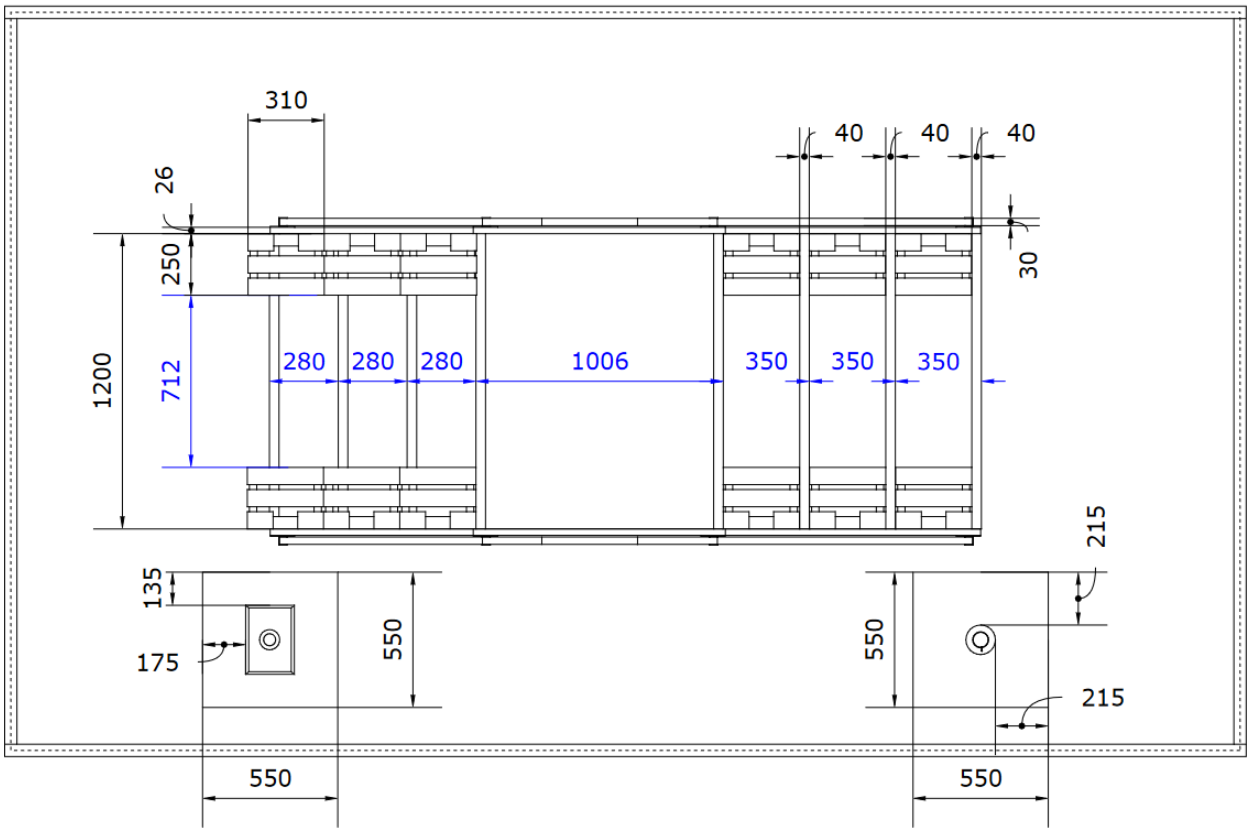

I.6.3 Step-over

I.6.3.1 Task infrastructure

Units	Object description	Details / Model	Source
10	Crate	Knagglig, 46x31x25cm, bottoms removed	IKEA
2	Saucer	365+	IKEA
2	Espresso cup, red	365+	IKEA
1	Side table	Lack (black or black brown)	IKEA

I.6.3.2 General task set-up

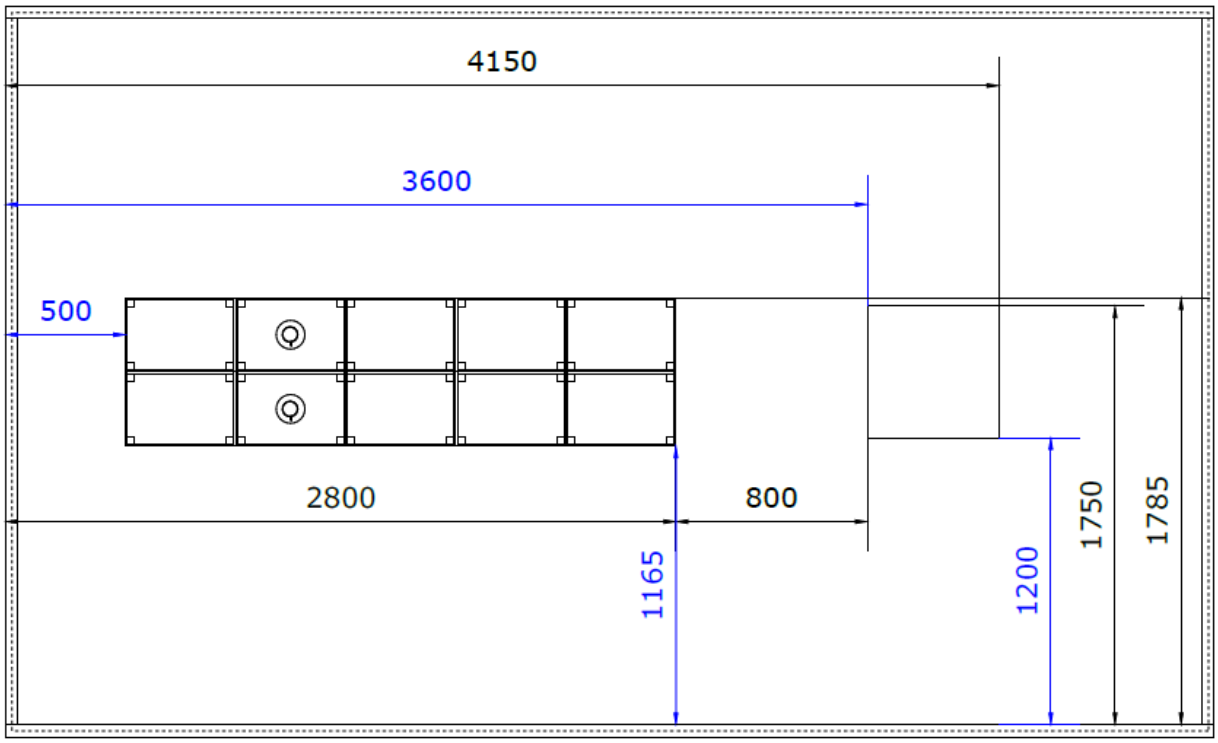

I.6.3.3 Infrastructure dimensions

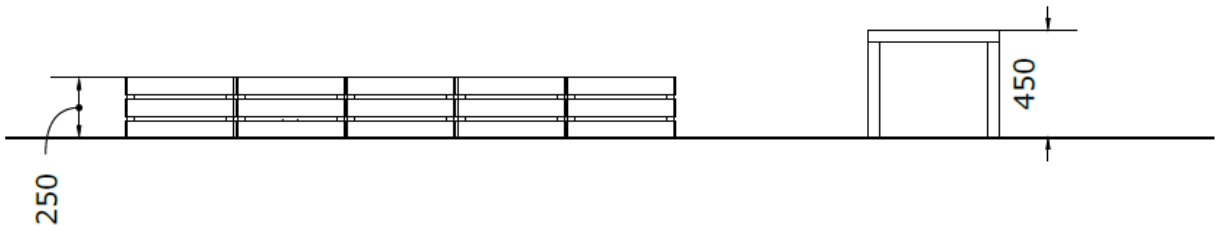

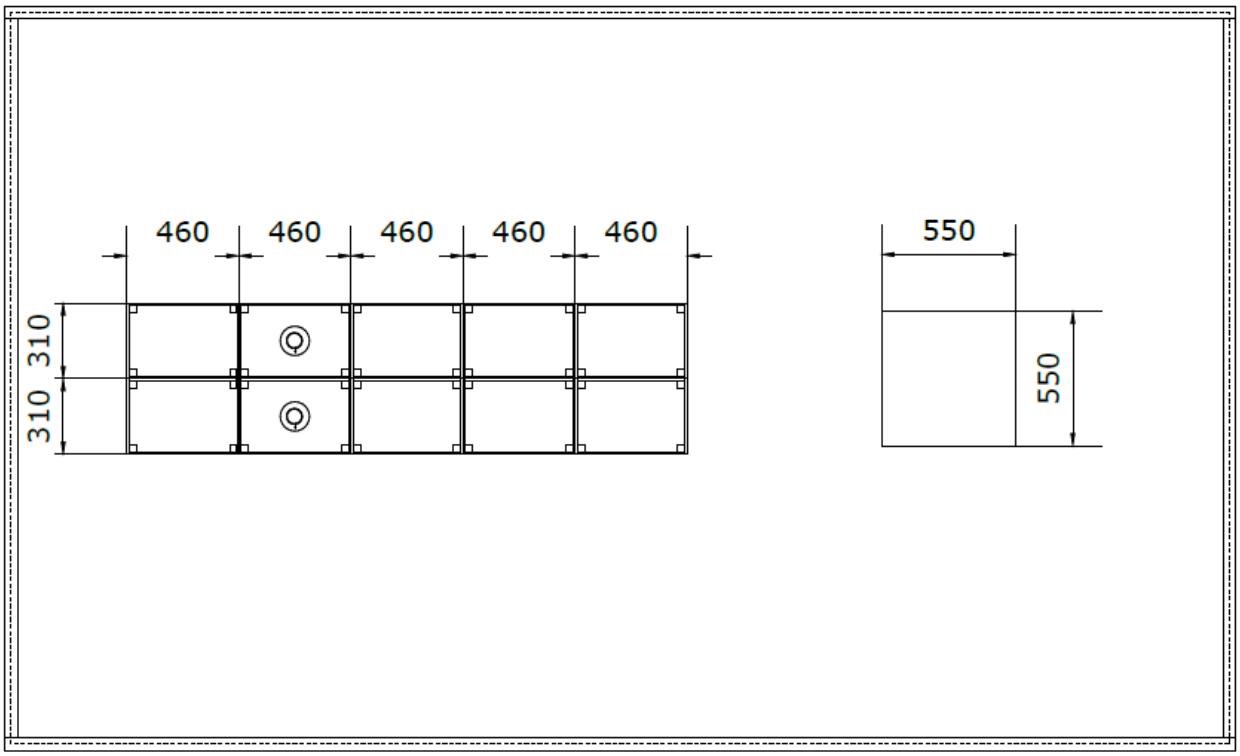
460
460
460
460
460
310
310
550
550

I.6.4 Slopes

I.6.4.1 Task infrastructure

Units	Object description	Details / Model	Source
2	Ramp	wood, top surfaces with increased friction and painted grey	custom made
2	Carpet/plate, blue	thickness 3-5mm	custom made
4	Object	white, 3D-printed from the files on the CYBATHLON dashboard for registered teams: 20220930_LEG__SLOPES__CIRCLE.stl 20220930_ … _CUBE.stl 20220930_ … _STAR.stl 20220930_ … _TRIANGLE.stl	PRUSA
4	Target location	Printed shape on top presenting corresponding objects	custom made

I.6.4.2 General task set-up

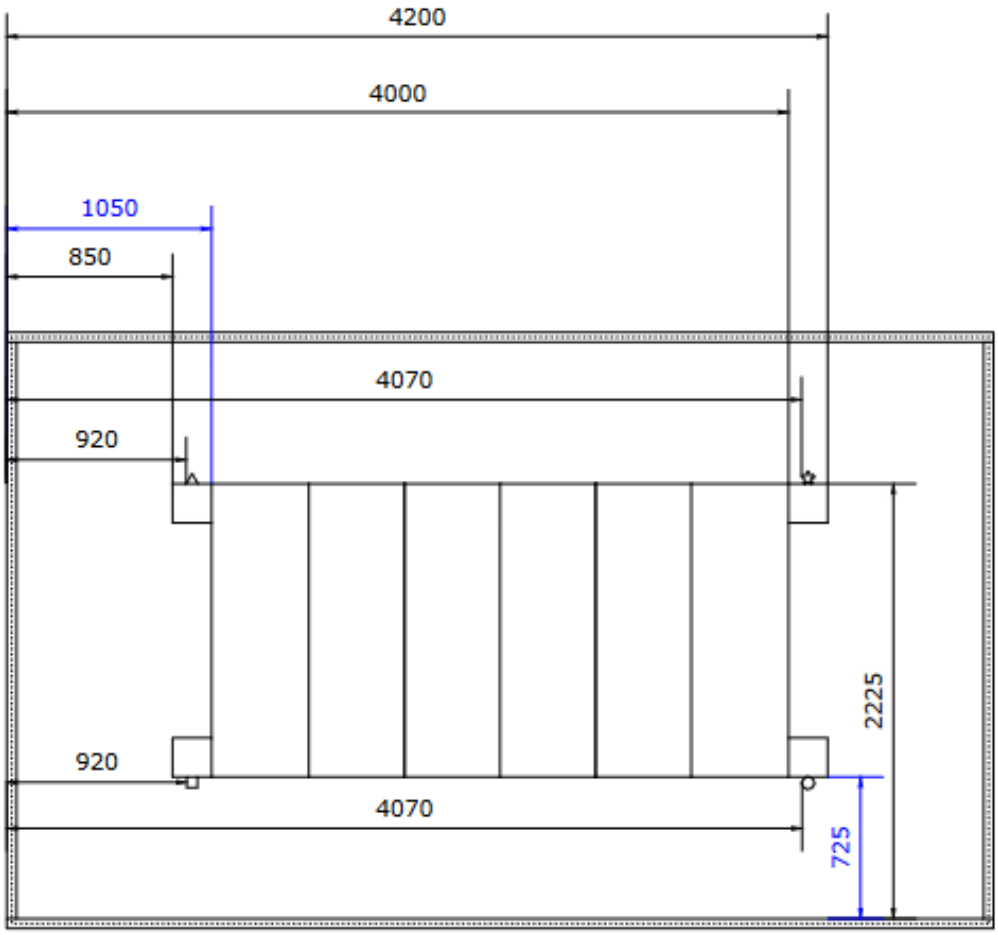

I.6.4.3 Infrastructure dimensions

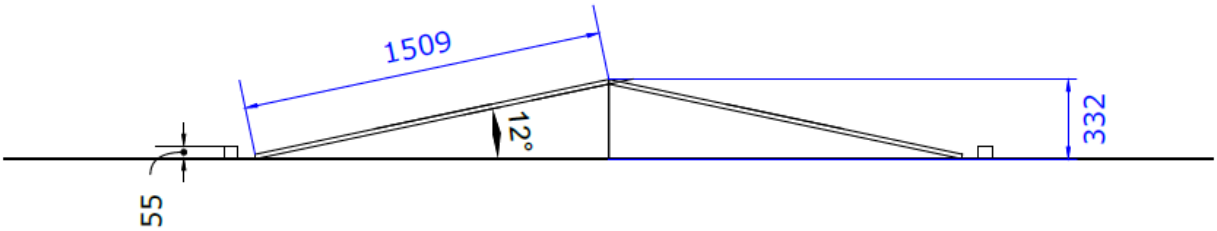

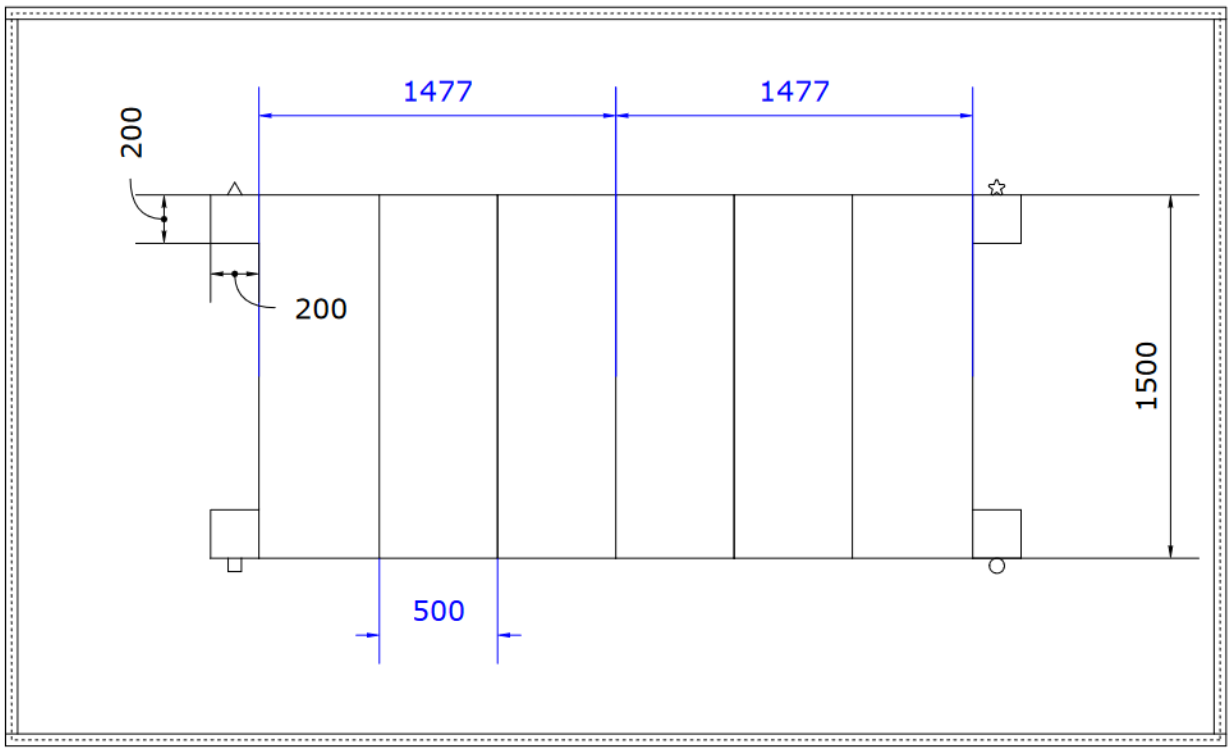

I.6.5 Bench & Table

I.6.5.1 Task infrastructure

Units	Object description	Details / Model	Source
1	Bench	Tjusig, stainless steel tubes not mounted	IKEA
1	Table	Sandsberg, 110x67cm	IKEA
2	Bench neighbours, red	wooden	custom made

I.6.5.2 General task set-up

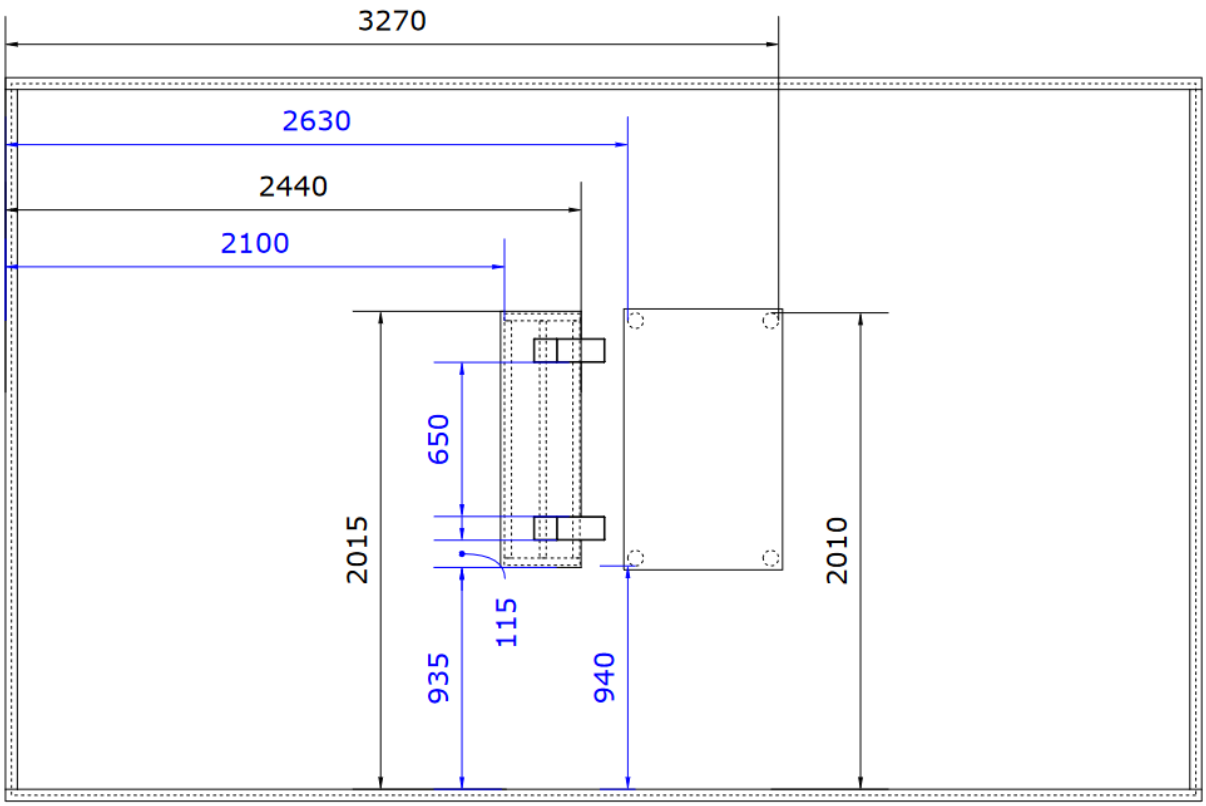

I.6.5.3 Infrastructure dimensions

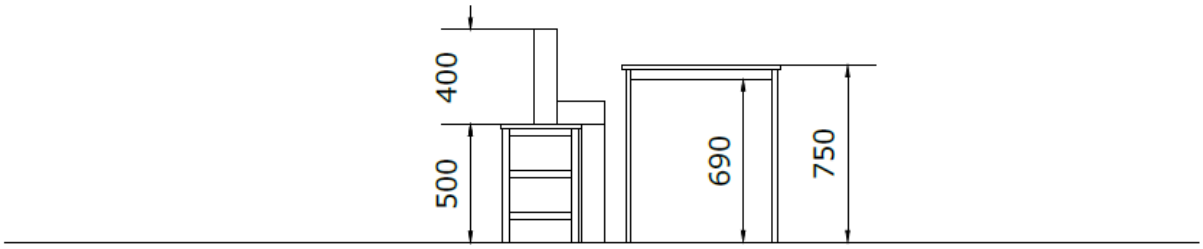

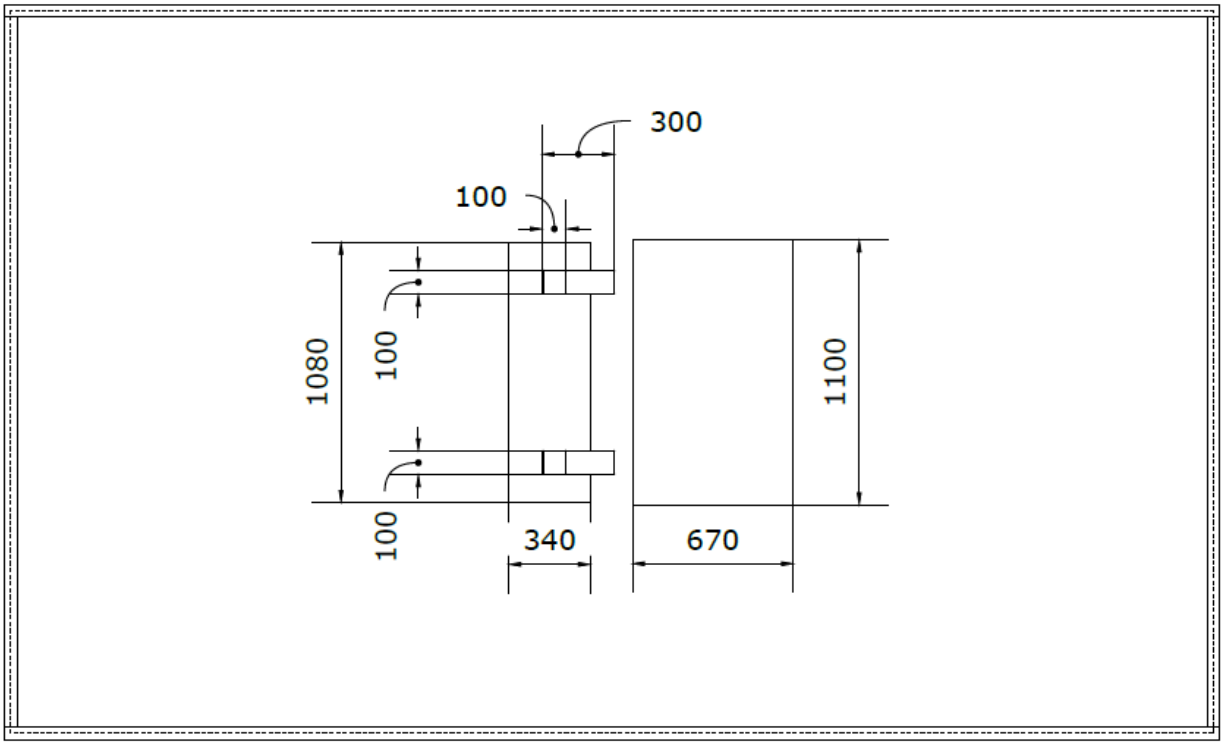

I.6.6 Wobbly Steps

I.6.6.1 Task infrastructure

Units	Object description	Details / Model	Source	Provided by CYBATHLON
7	Circular plate with cylindrical base	surfaces of the plate with increased friction and painted grey Prepare marks also for mirrored set-up	custom made	
8	Anti slip layer patches	to be mounted underneath the bench legs		To local hubs only
1	Door mat	Österild (small, 40x60cm)	IKEA	

I.6.6.2 General task set-up

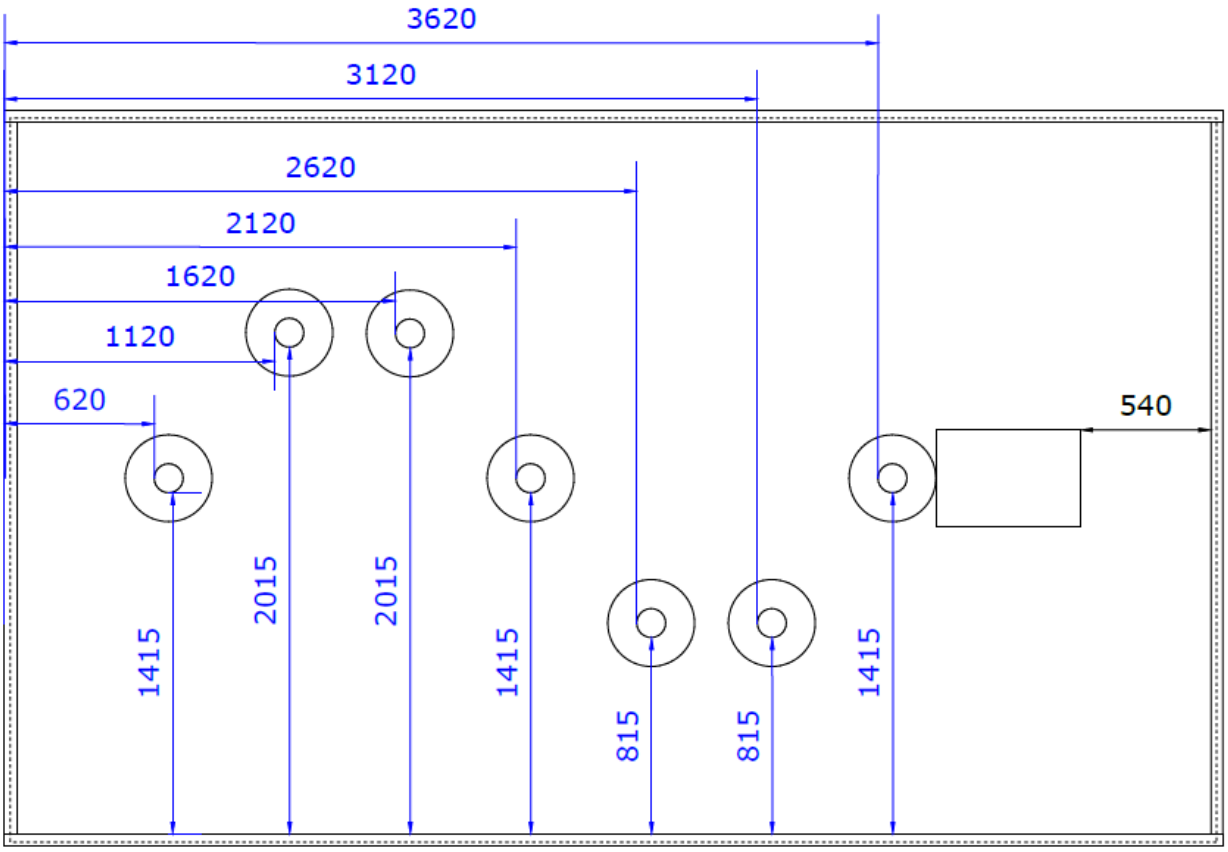

I.6.6.3 Infrastructure dimensions

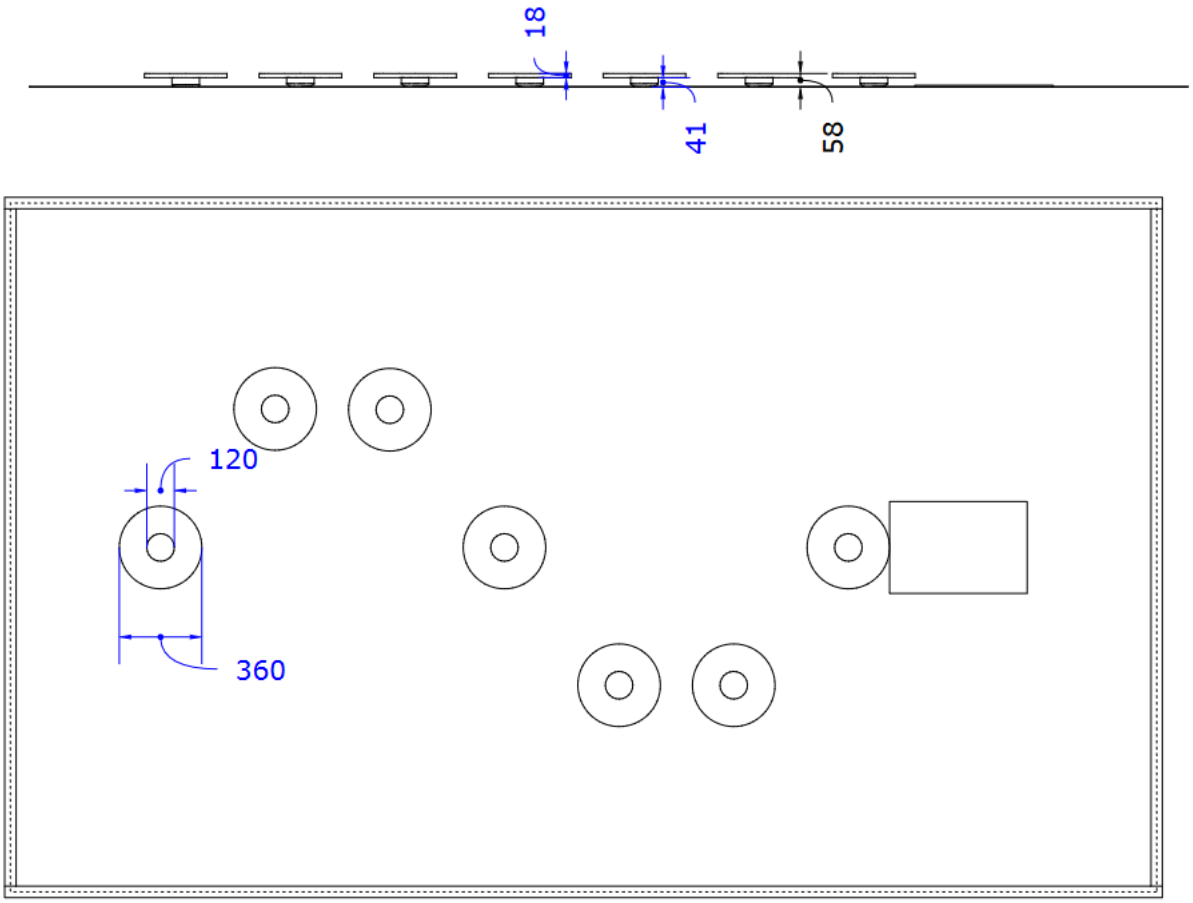

I.6.7 High Step

I.6.7.1 Task infrastructure

Units	Object description	Details / Model	Source
2	Box		custom made
3	Box with blue top surface		custom made
1	Boxes fixation system	It is possible to only use the centre slot for each position (the other two slots are only used in the EXO discipline)	custom made
10	Pole, red	wood, l: 800mm	custom made

I.6.7.1.1 Dimensions of boxes

	Box 1	Box 2	Box 3	Box 4	Box 5
Height [mm]	180	220	260	200	240
Length [mm]	300	290	330	270	310
Colour	blue	blue	blue	wooden	wooden

I.6.7.2 General task set-up

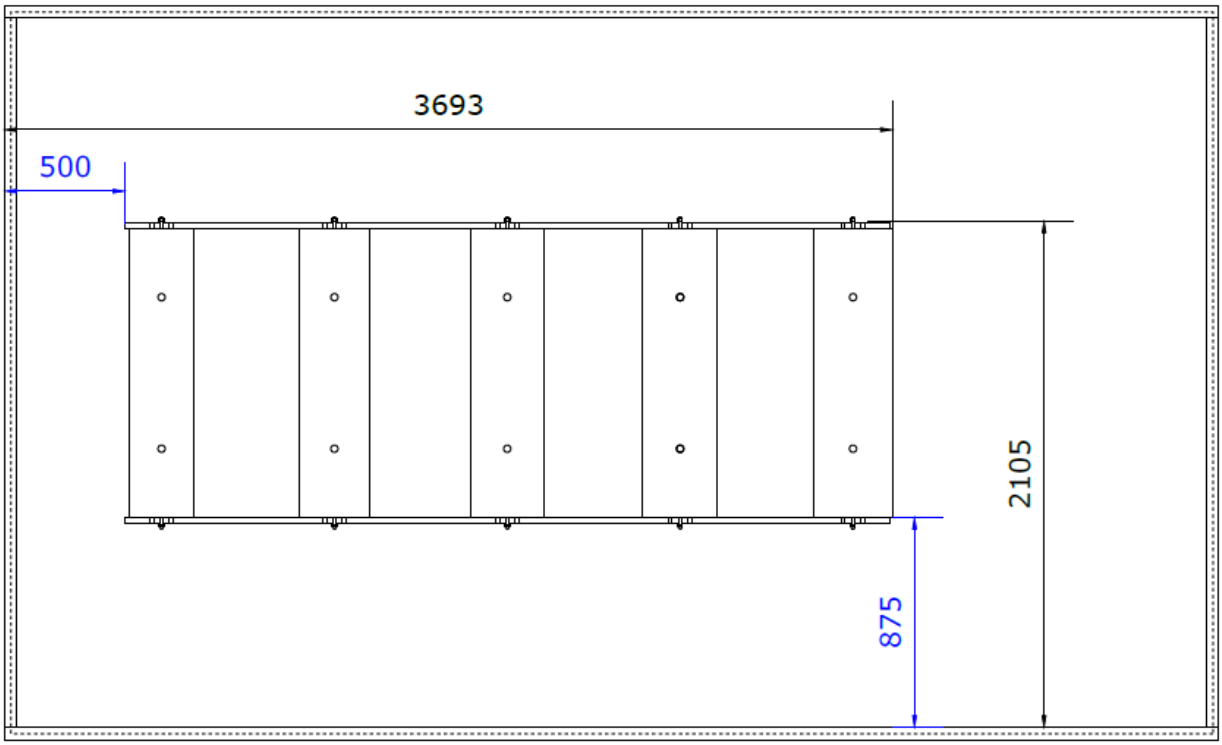

I.6.7.3 Infrastructure dimensions

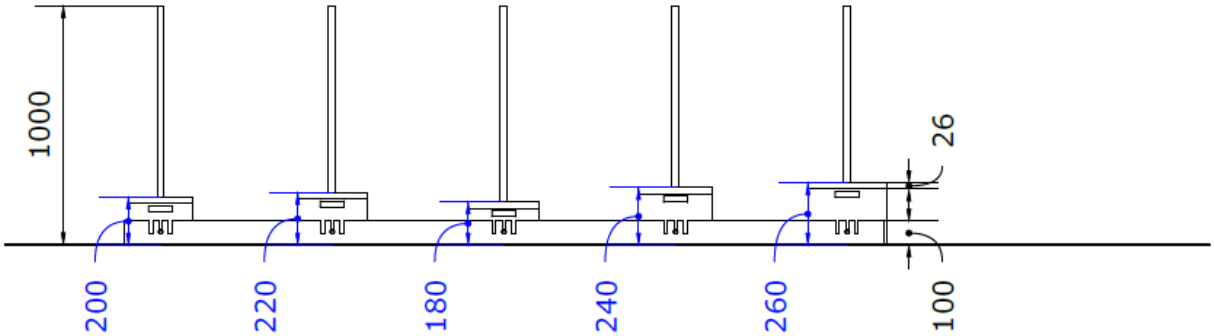

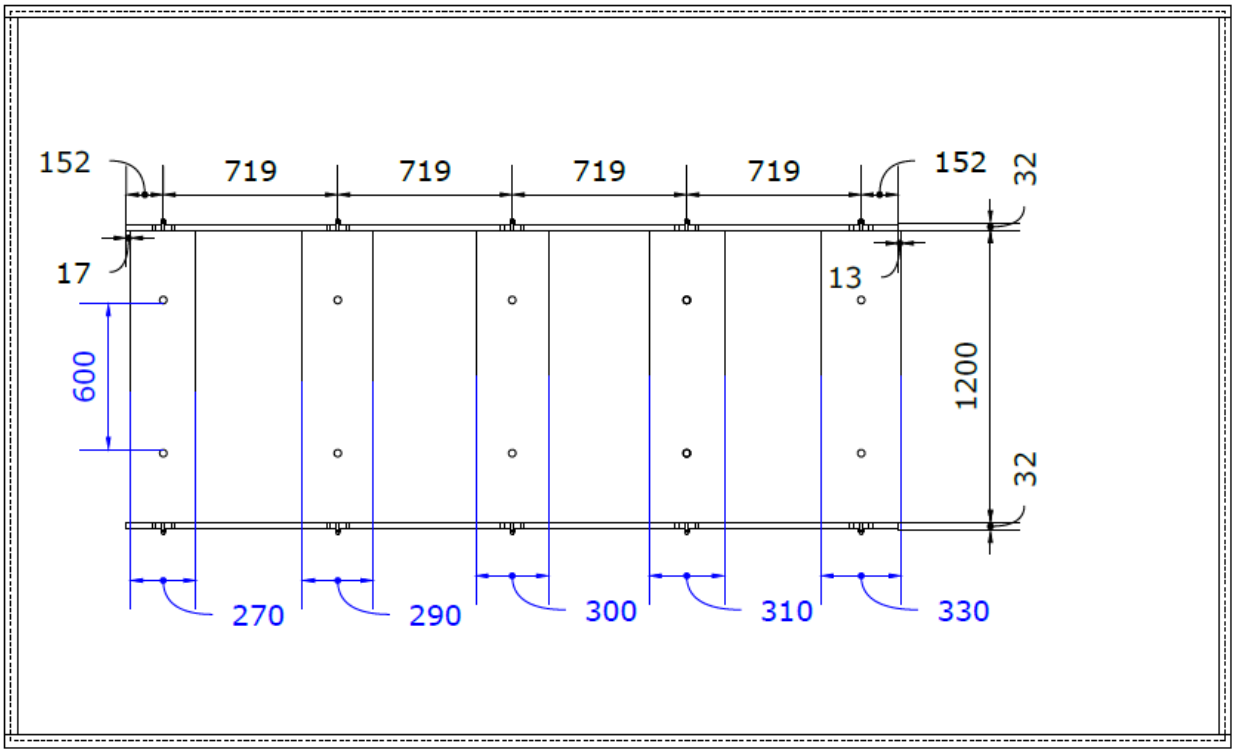

I.6.7.4 Box – manufacturing information

To prevent the poles from tipping over, they are guided by a second hole at the bottom of the box.

I.6.7.5 Boxes fixation system - assembly information

	
The boxes are attached to the lateral boxes fixation system with threaded nuts on a M10 threaded rod. For safety reasons and different to the pictures above we suggest to shorten the rod that protrudes the lateral fixation to a minimum and to use a self-locking nut instead of a butterfly nut.	

I.6.8 Ladder

I.6.8.1 Task infrastructure

Units	Object description	Details / Model	Source
1	Base plate	Black, with mounting bracket for shelving unit	custom made
1	Stepladder	Bekväm, step stool, black, the ladder is screwed to the wooden baseplate	IKEA
1	Shelving unit		costum made
1	Side table	Lack (black or black brown)	IKEA
1	Saucer	365+	IKEA
1	Unscented pillar candle, red	Fenomen	IKEA

I.6.8.2 General task set-up

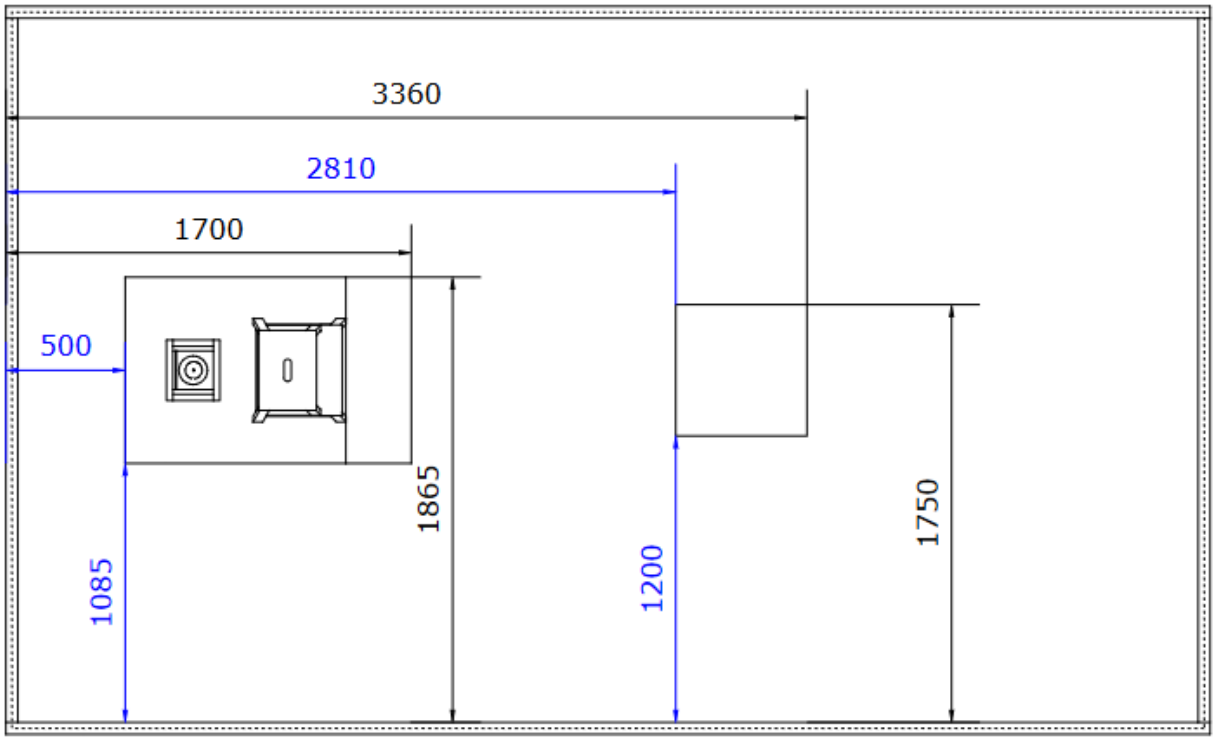

I.6.8.3 Infrastructure dimensions

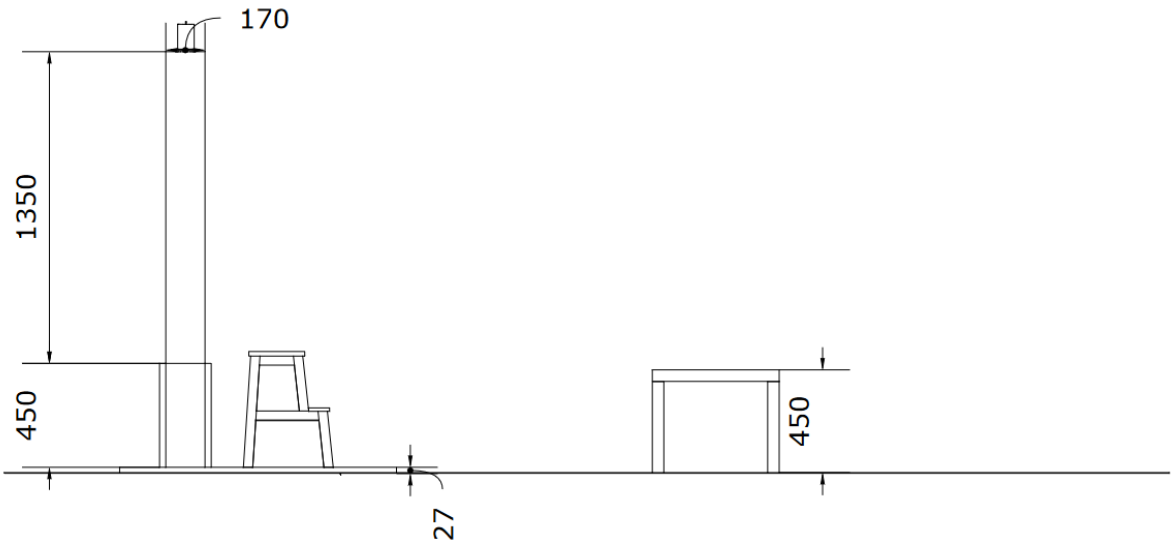

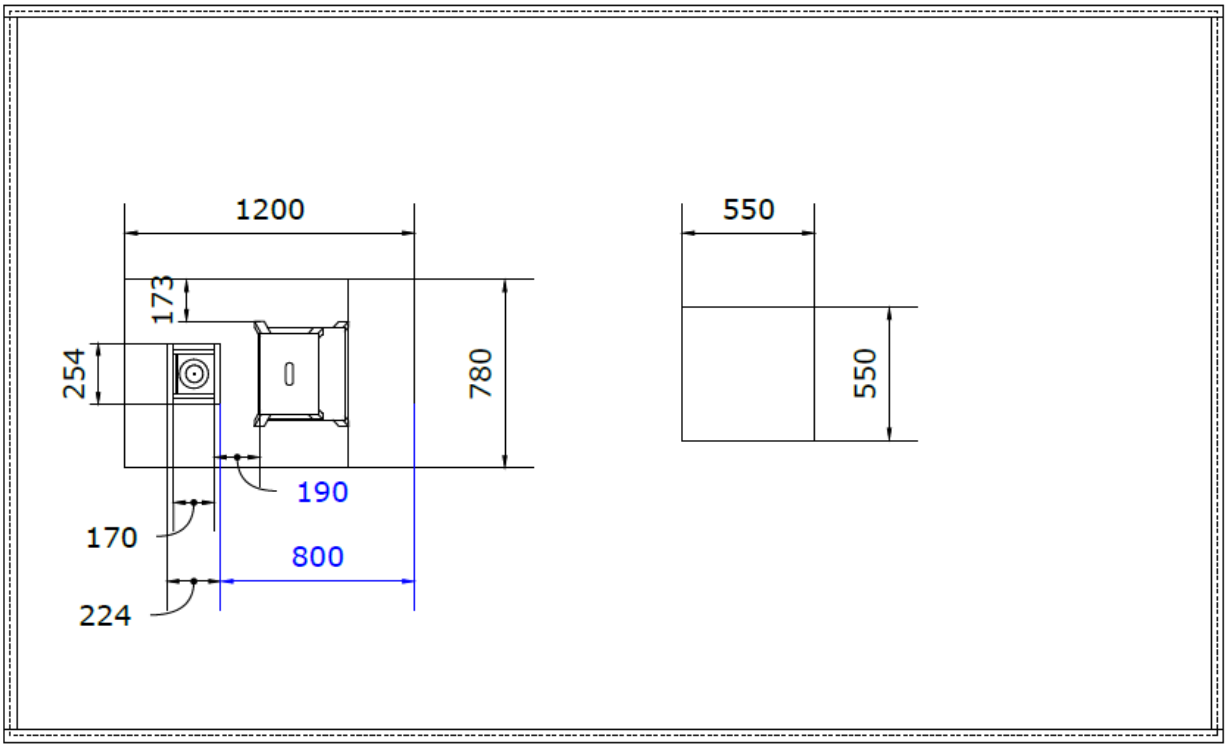

I.6.9 Cross Country

I.6.9.1 Task infrastructure

Units	Object description	Details / Model	Source
4	Base plate	wood, with fixtures for attachment and lateral reinforcement, holes with diameter of 22 mm (half-cylinders fixed but easy to be removed for repositioning on the base plate to allow a variation of patterns)	custom made
4	Half cylinder bar short	wood, top surfaces with increased friction and painted grey, l: 250 mm, dowels with diameter of 20mm and length of min. 20mm	custom made
10	Half cylinder bar long	wood, top surfaces with increased friction and painted grey, l: 400 mm, dowels with diameter of 20mm and length of min. 20mm	custom made
2	Cube	white, 3D-printed from the file on the CYBATHLON dashboard for registered teams: 20220930_LEG__STONES__CUBE.stl	PRUSA
2	Target position disc	3D-printed from the file on the CYBATHLON dashboard for registered teams: 20240425_LEG__CROSS_COUNTRY__DISC.stl	custom made

I.6.9.2 General task set-up

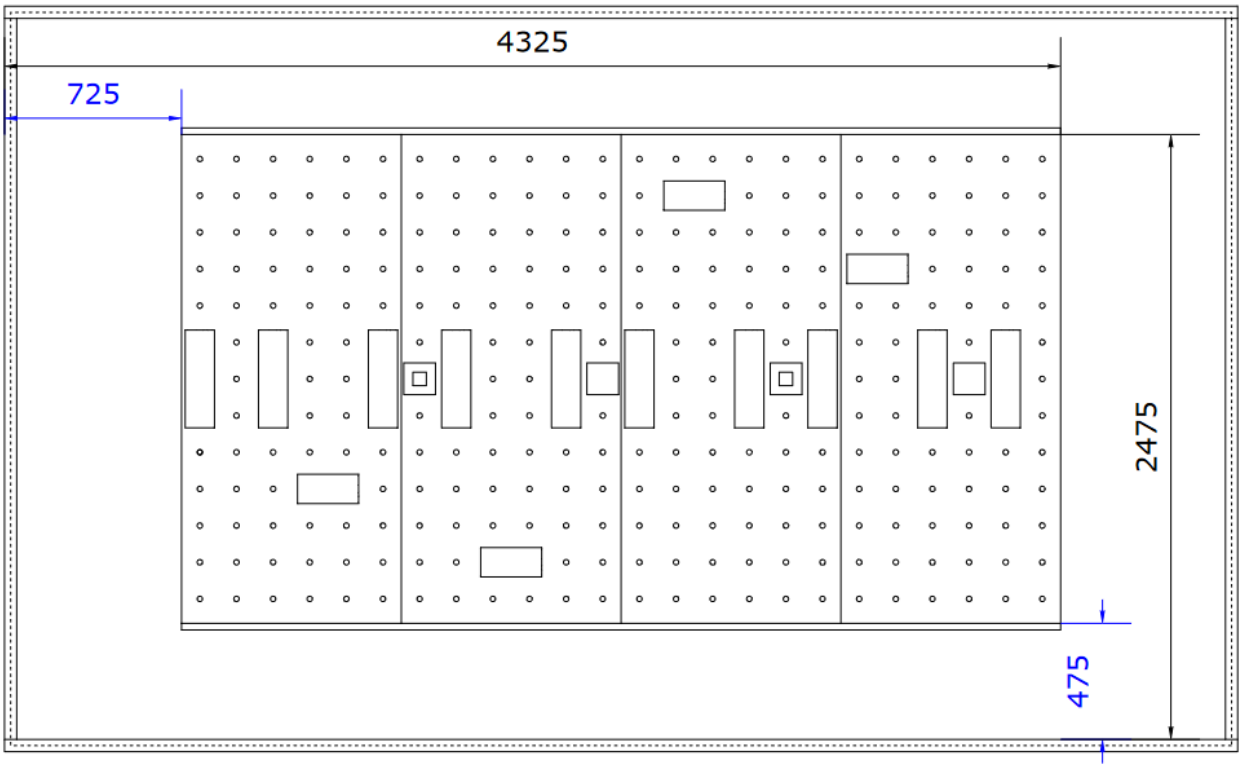

I.6.9.3 Infrastructure dimensions

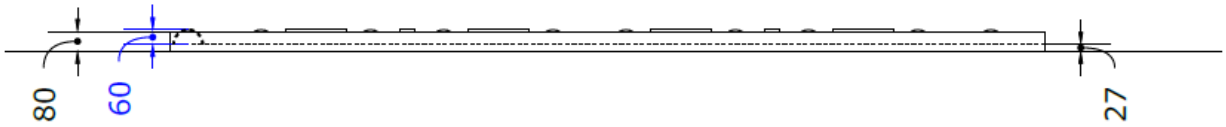

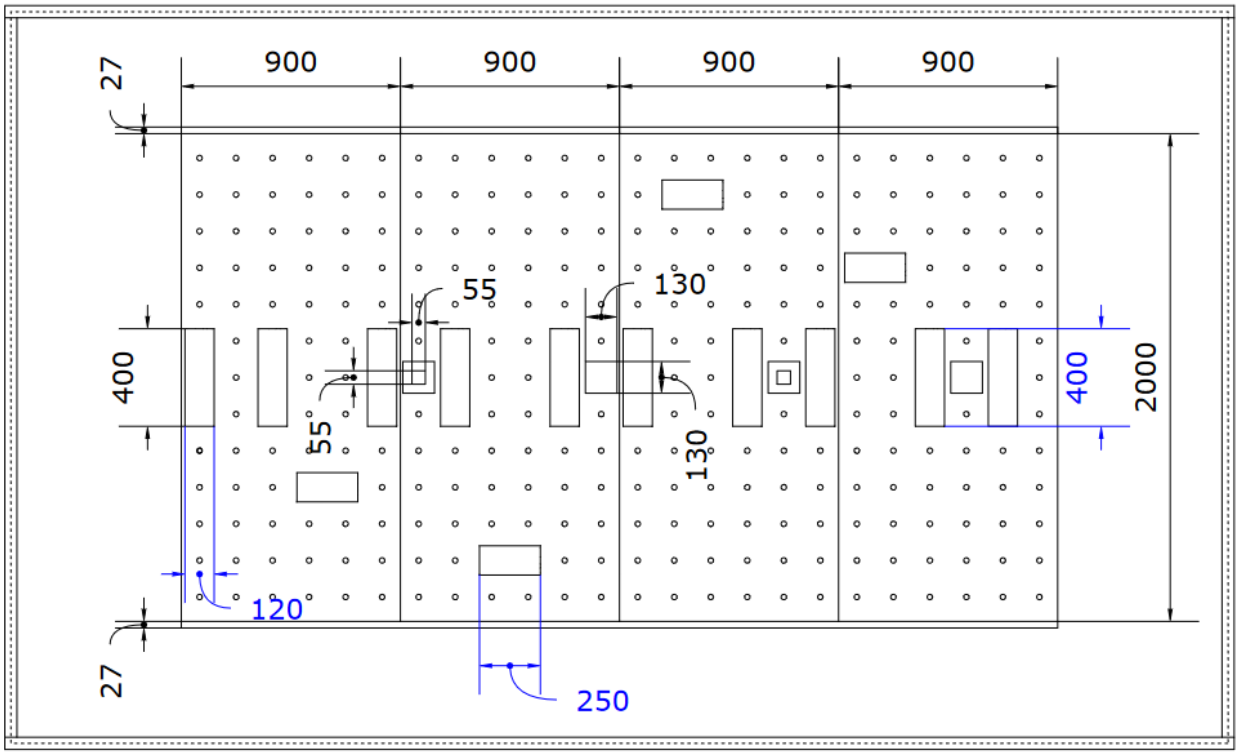
900
900
900
900
27
27
400
55
55
130
130
400
2000
120
250

I.6.10 Hurdles

I.6.10.1 Task infrastructure

Units	Object description	Details / Model	Source
10	Socles	Wood	custom made
10	Poles	Wood	Custom made
7	Crossbar	l: 800mm, wood	custom made
14	Crossbar fixture	3D-printed from the file on the CYBATHLON dashboard for registered teams: 20240425_LEG__HUR-DLES__FIXTURE.stl	custom made

I.6.10.2 General task set-up

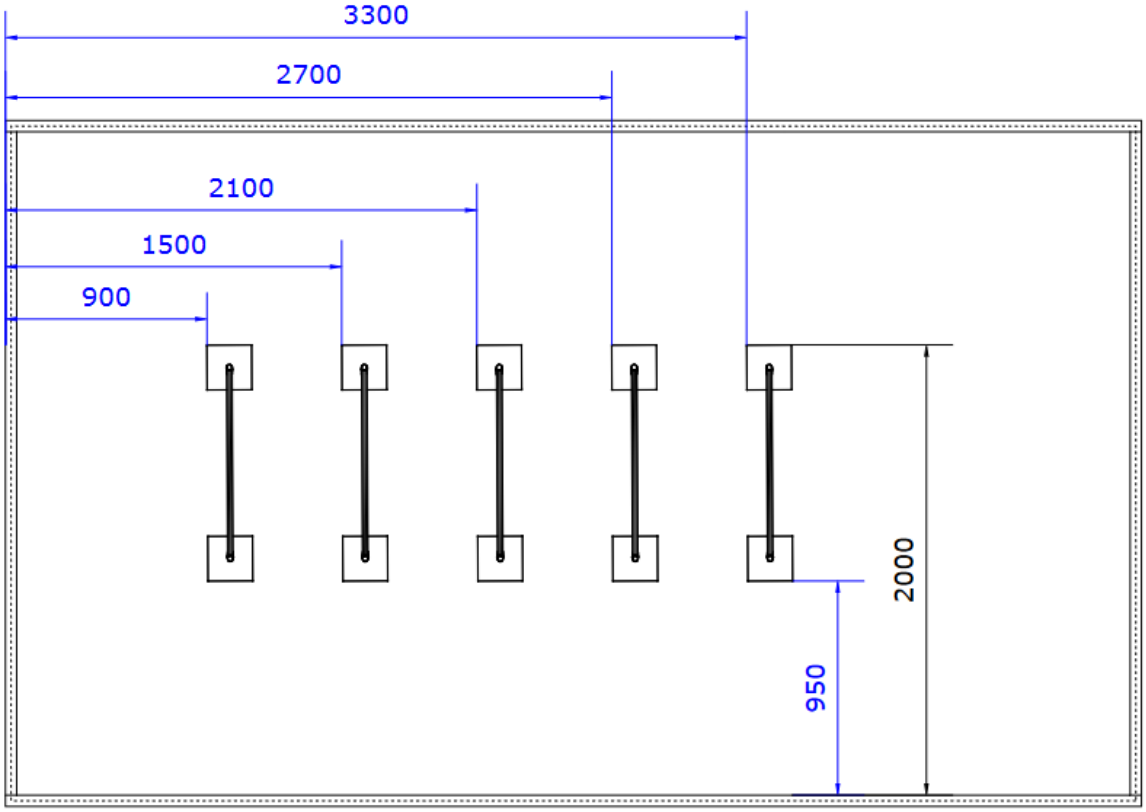

I.6.10.3 Infrastructure dimensions

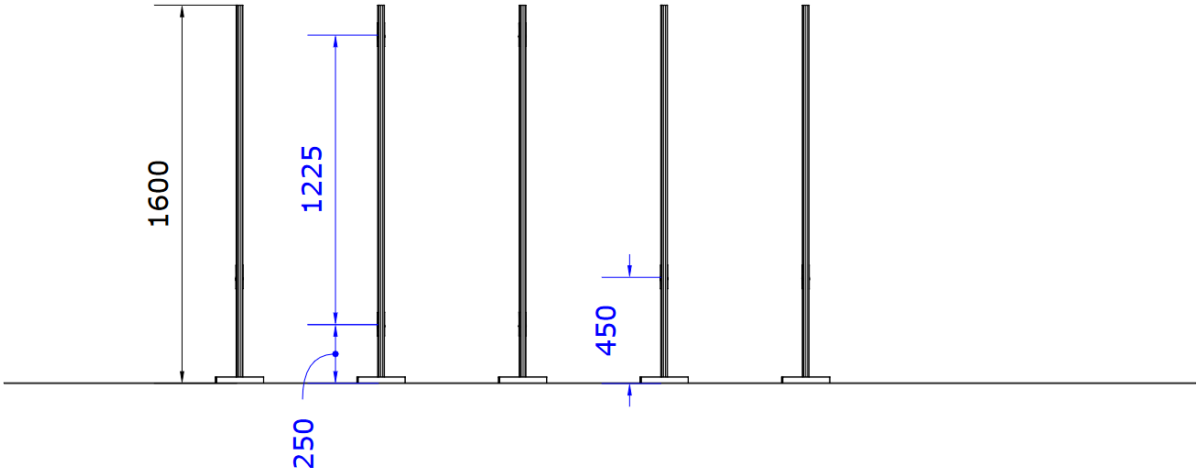

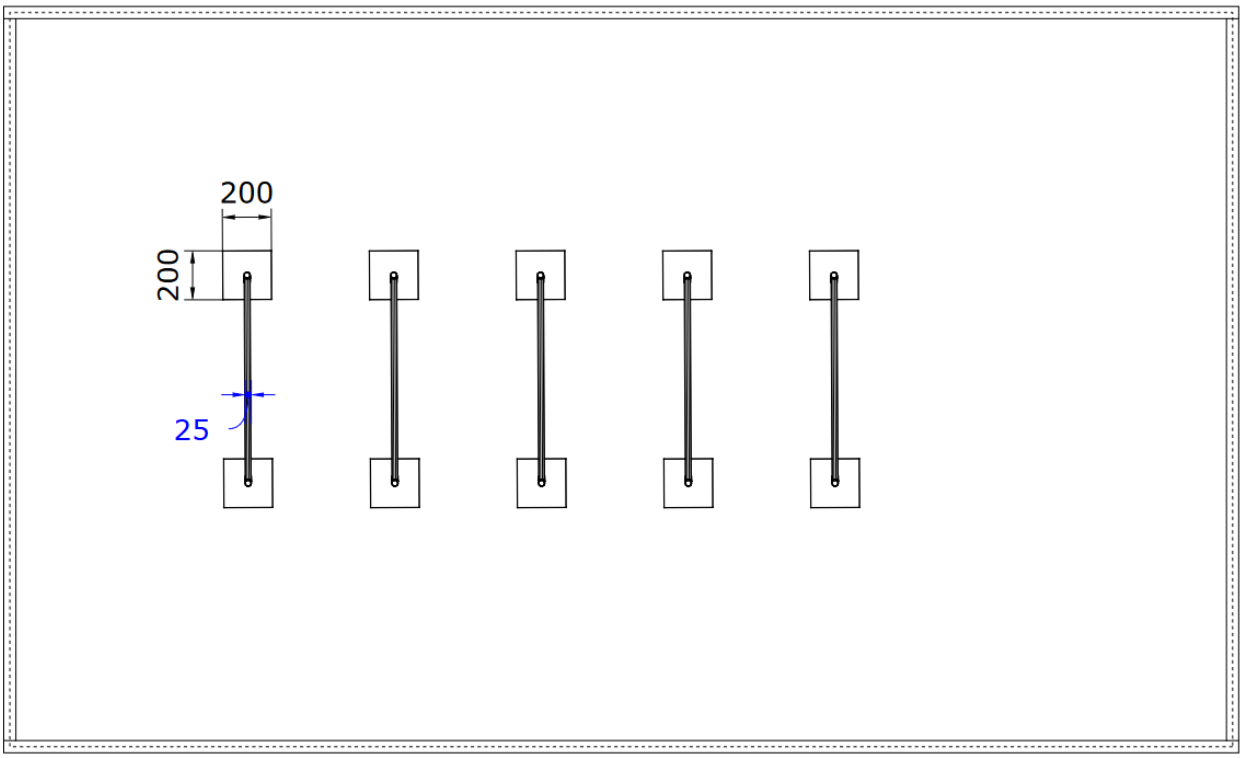

I.7 EXO

I.7.1 Train Compartment

I.7.1.1 Task infrastructure

Units	Object description	Details / Model	Source	Provided by CYBATHLON
2	Bench with backrest	Nämmarö	IKEA	
8	Anti slip layer patches	to be mounted underneath the bench legs		To local hubs only

I.7.1.2 General task set-up

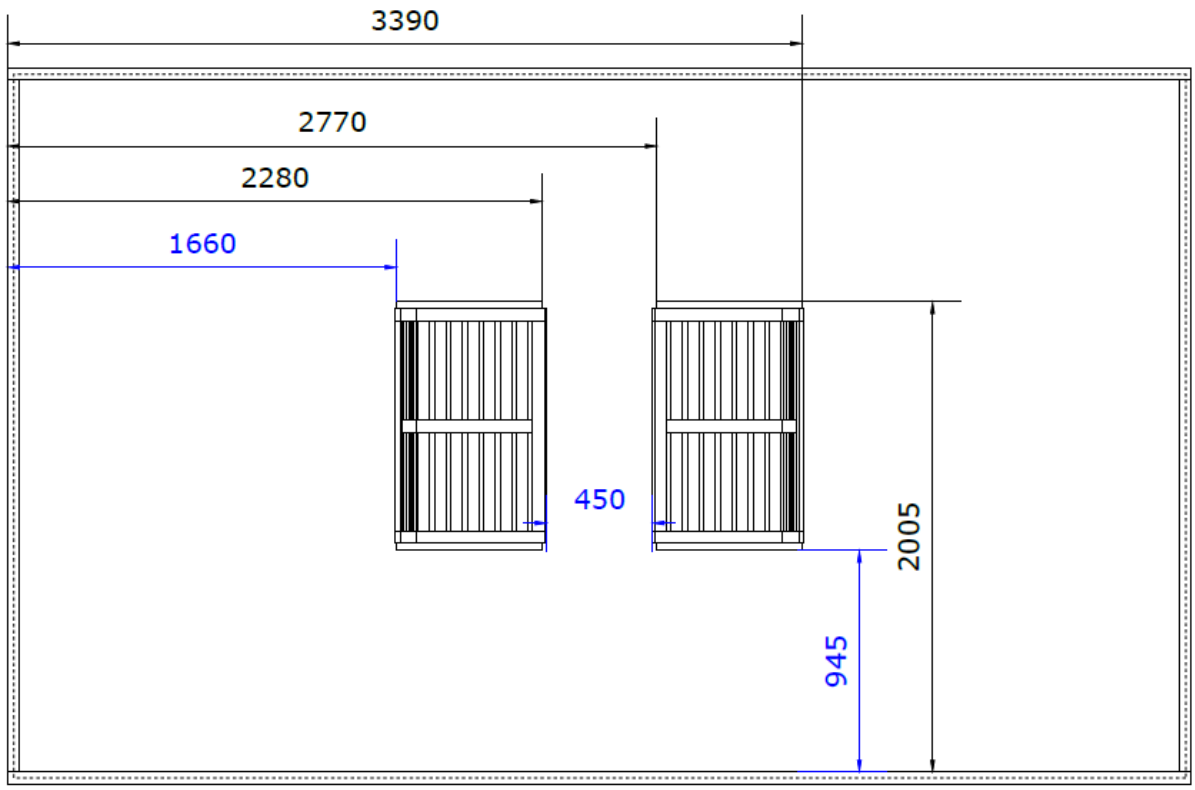

I.7.1.3 Infrastructure dimensions

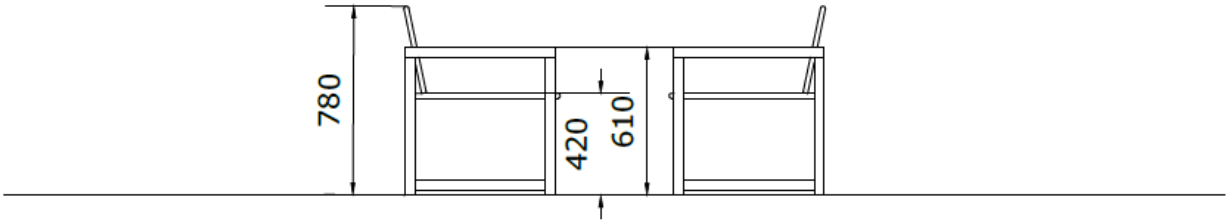

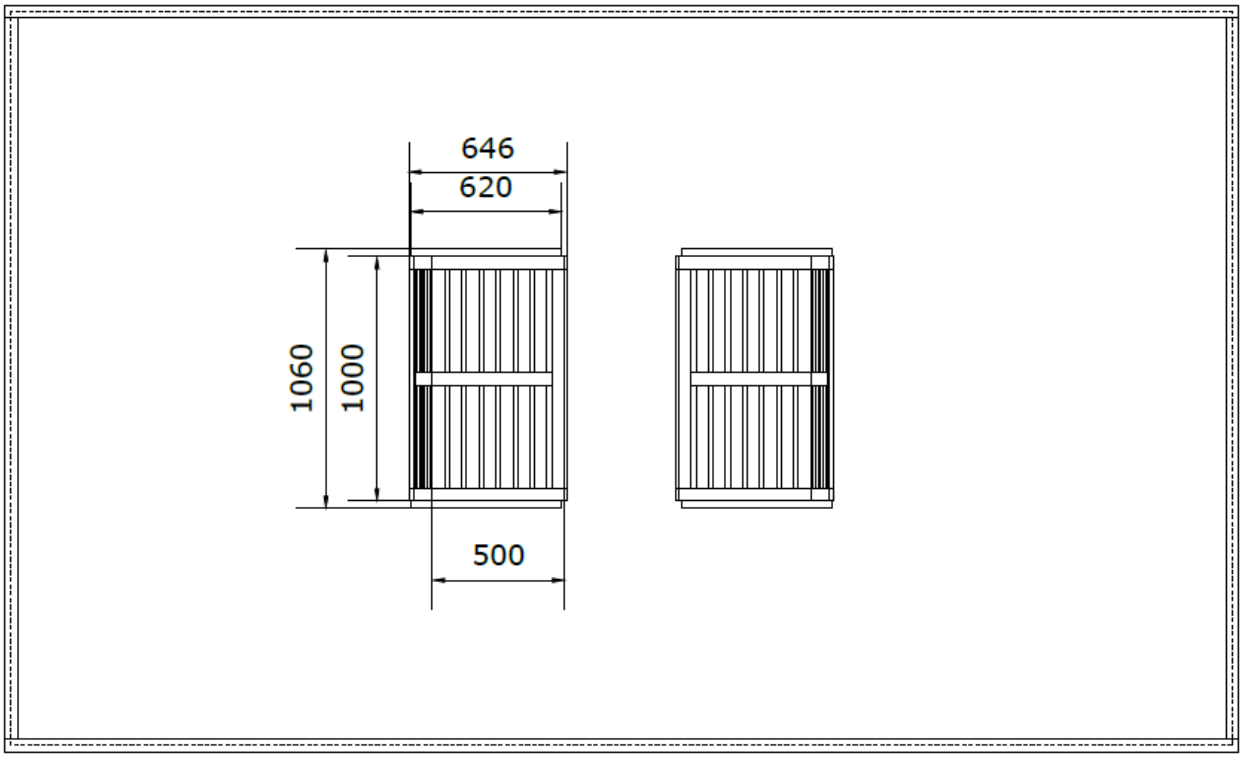

I.7.2 Stairs

I.7.2.1 Task infrastructure

Units	Object description	Details / Model	Source
1	Stairs	wood, optionally with recessed checker plate edge protection on each step (30-50cm, max. thickness of 5mm), CYBATHLON uses multi-layer solid wood	custom made
2	Handrail (1 for each side)	steel	custom made

I.7.2.2 General task set-up

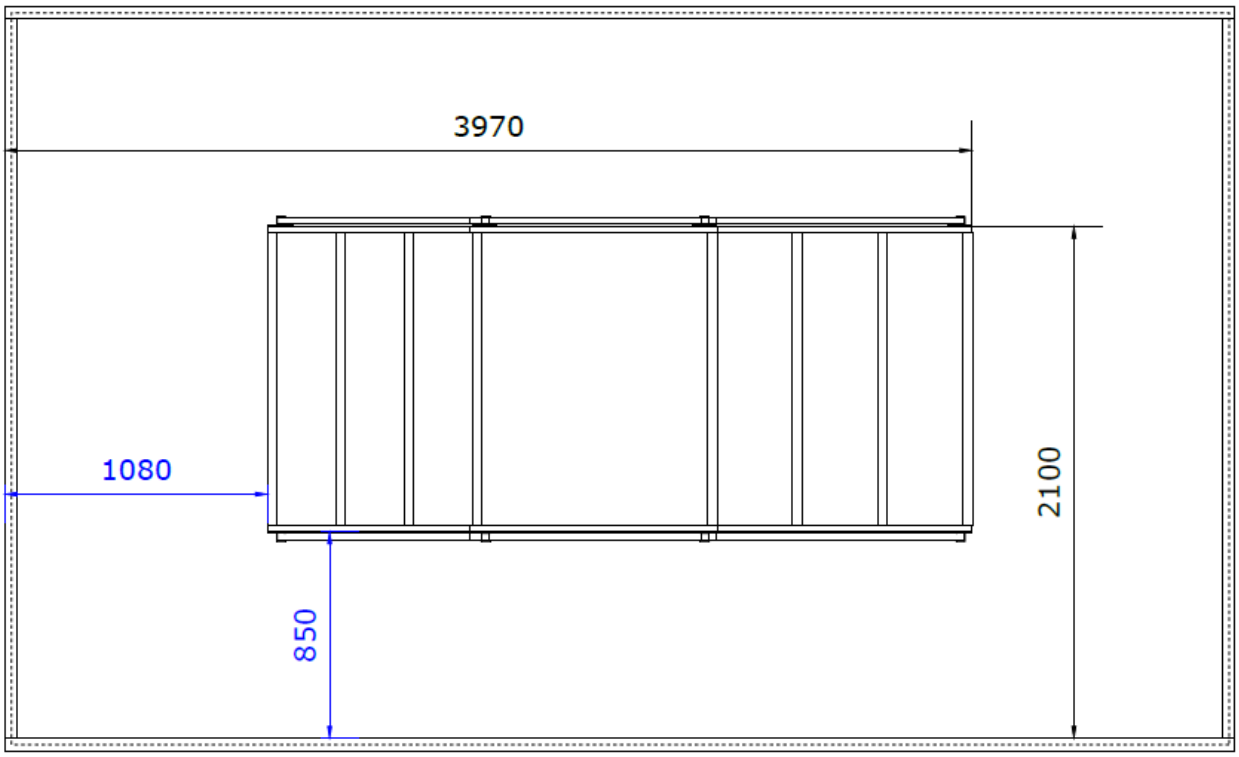

I.7.2.3 Infrastructure dimensions

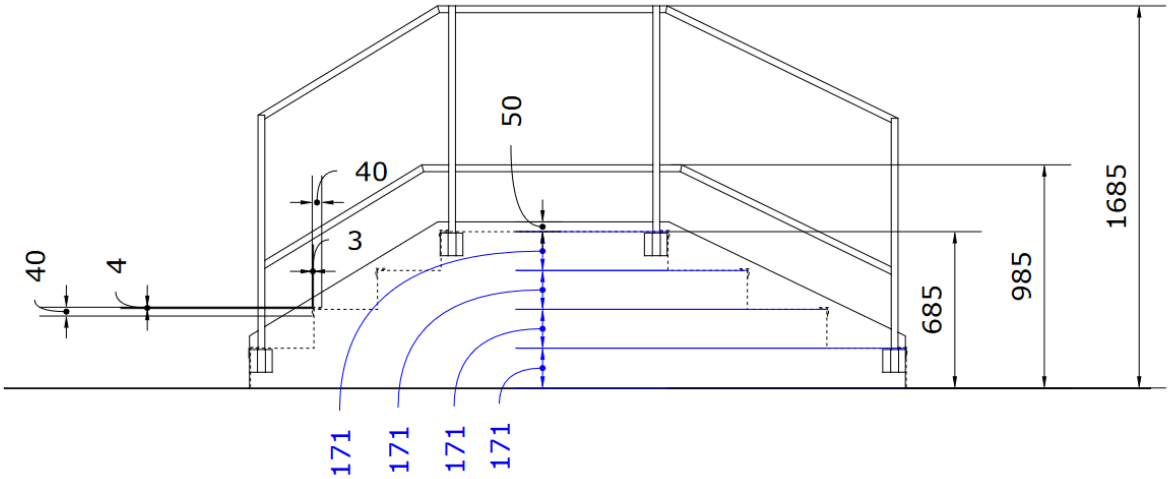

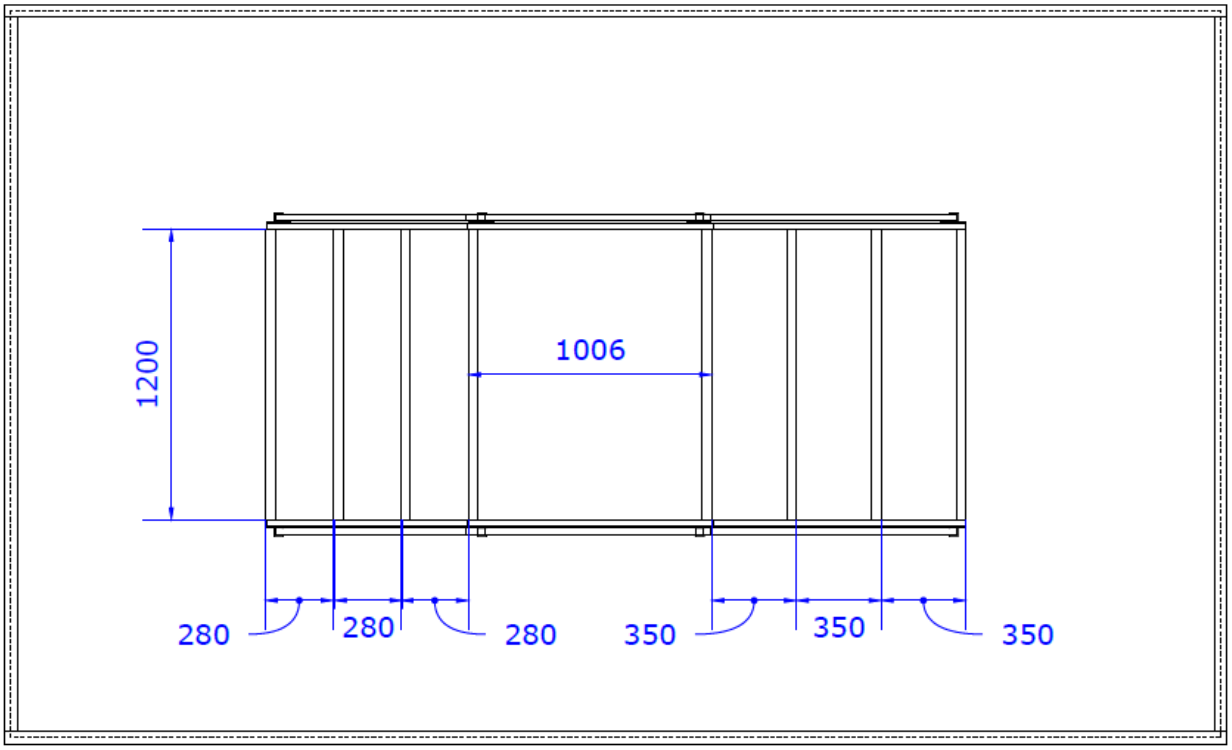

I.7.3 Moving Parcel

I.7.3.1 Task infrastructure

Units	Object description	Details / Model	Source
1	Shelving unit	Kallax 1x2	IKEA
1	Storage box	Nimm, 25x35x15cm, box handles removed, PET bottles inside, lid is fixed to the box with black tape, empty weight: 420g, weight with bottles and tape: 1480g weight tolerance: +/- 100g	IKEA
2	PET bottle, white transparent (0.5l), filled with 0.5l water	empty weight (with cap): 26g, filled with 0.5l water: 526g	bottleshop
2	Bottle cap	Water closure white Code: 12820011M1	bottleshop
1	Side table	Lack (black or black brown)	IKEA

I.7.3.2 General task set-up

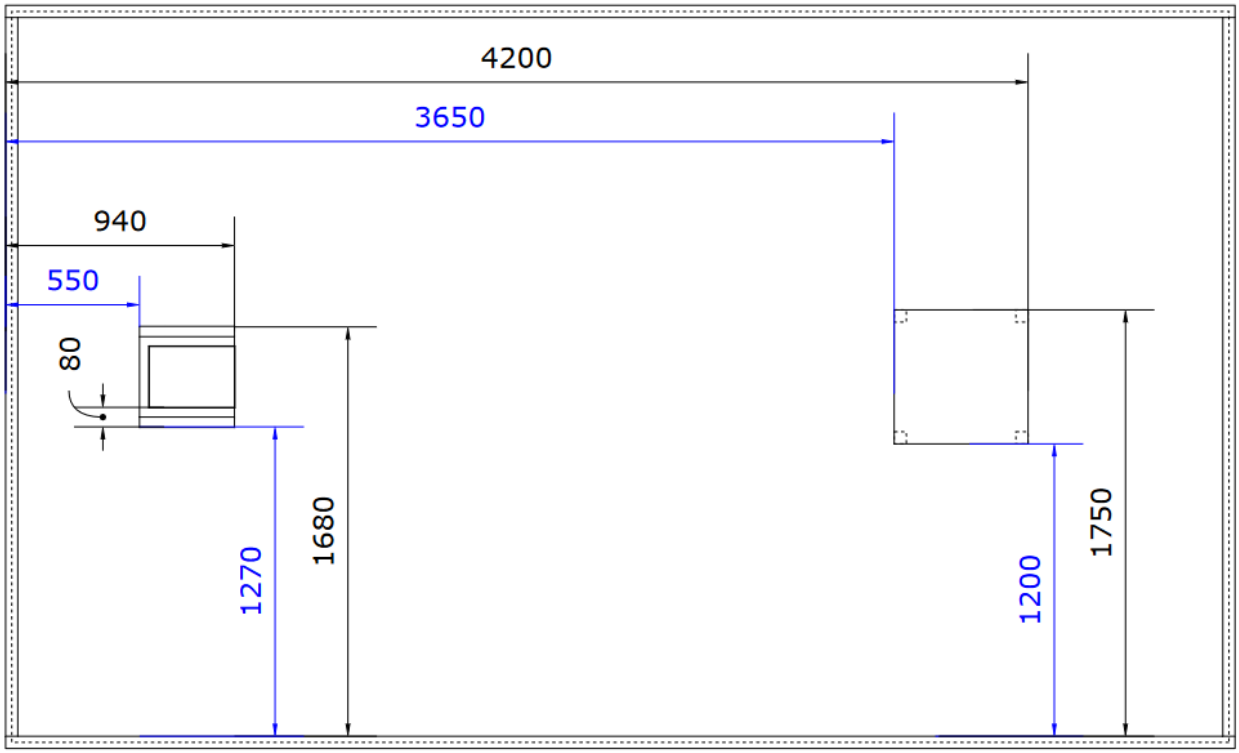

I.7.3.3 Infrastructure dimensions

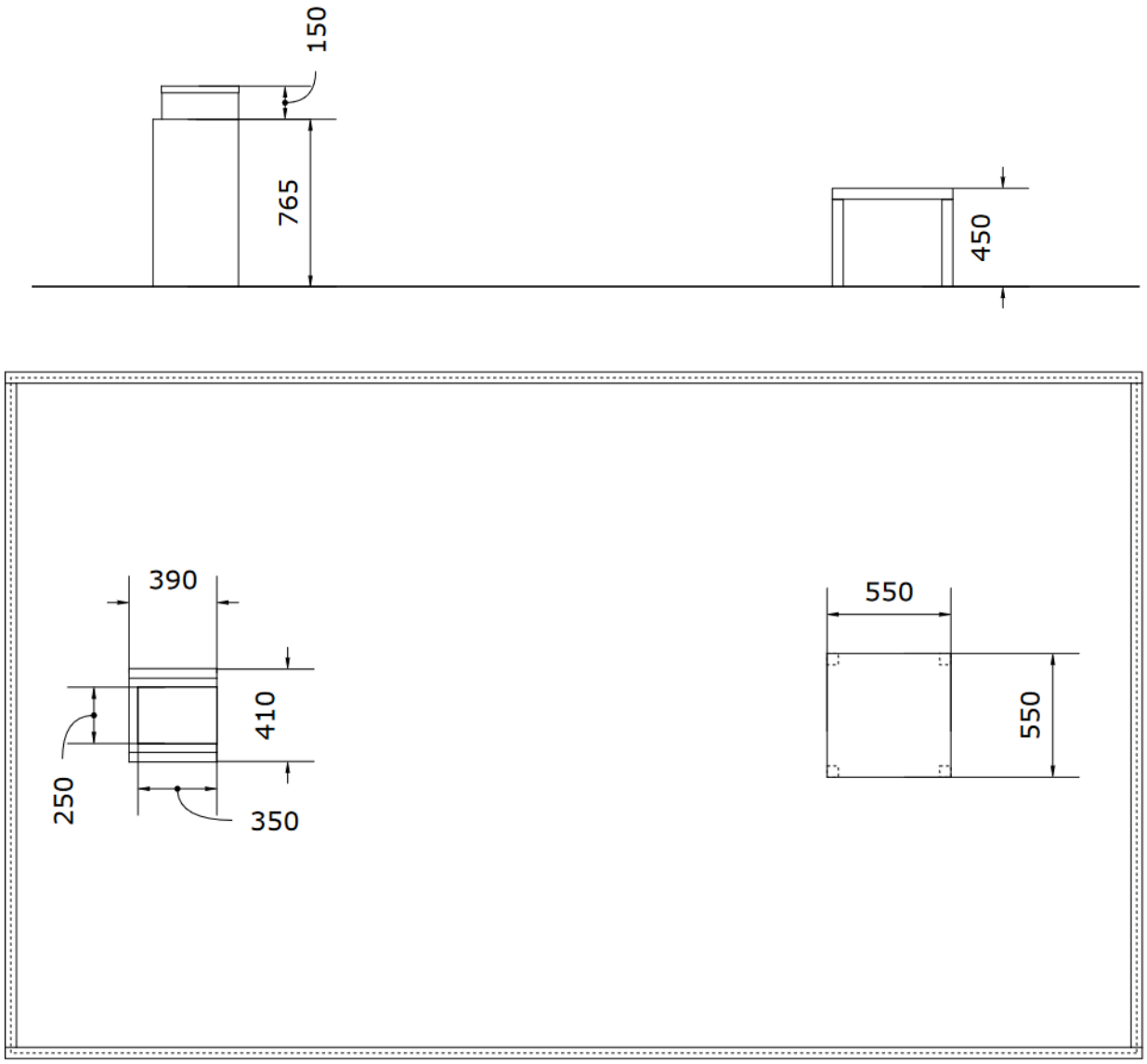

I.7.4 Tilted Path

I.7.4.1 Task infrastructure

Units	Object description	Details / Model	Source
1	Ramp (3m)	wood, top surfaces with increased friction and painted grey, white lines of 50mm width at the entrance and exit of the ramp	custom made
2	Sidewall	wood	custom made
1	Backwall	wood	custom made
2	Carpet/plate, red	thickness 3-10mm, 1 (small) on the ramp / 1 (big) on the floor	custom made

I.7.4.2 General task set-up

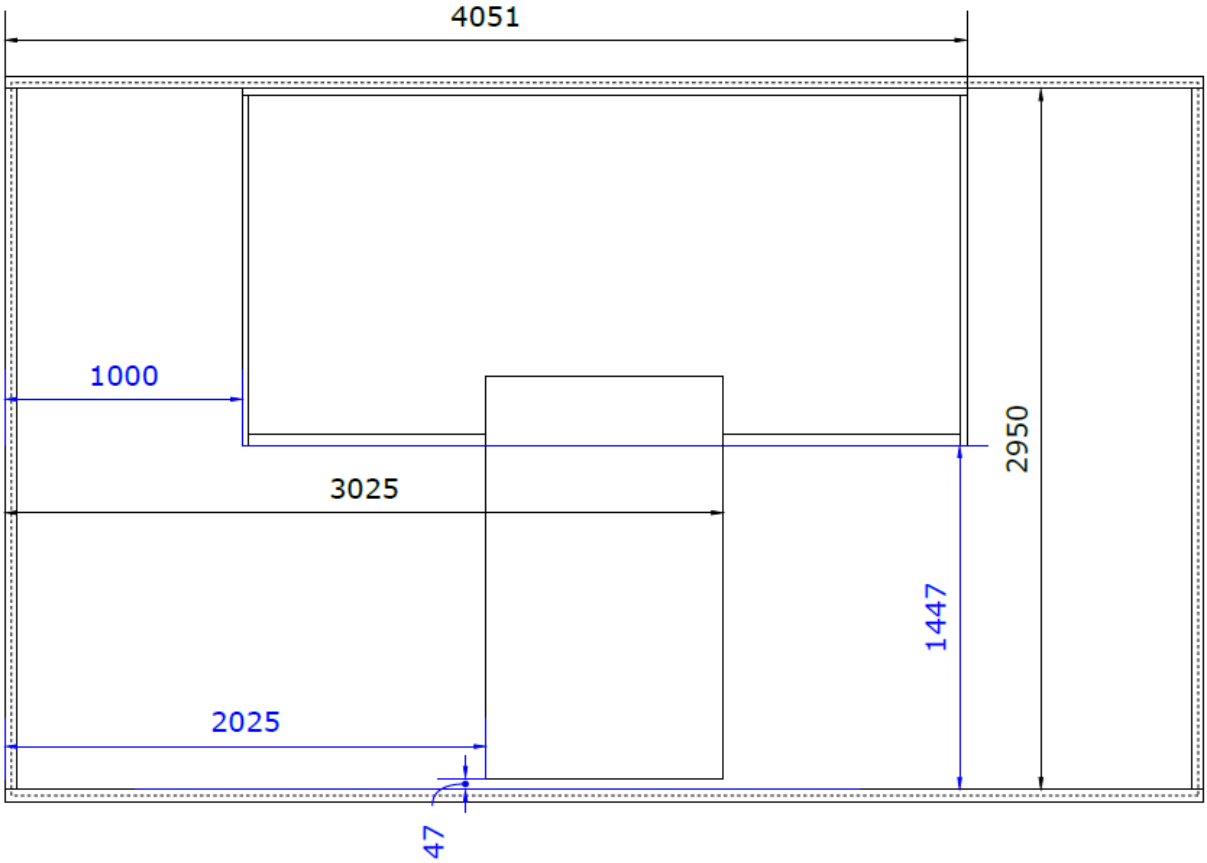

I.7.4.3 Infrastructure dimensions

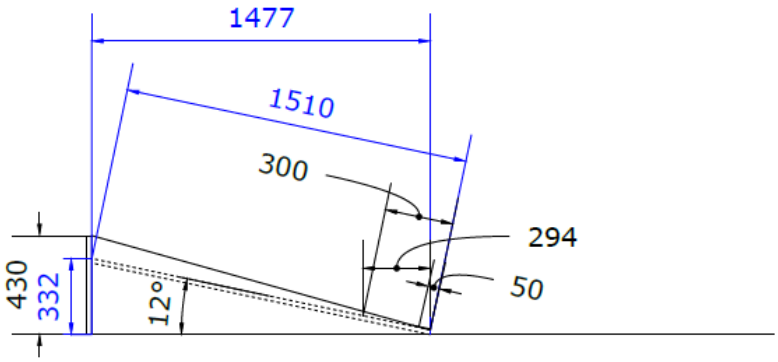

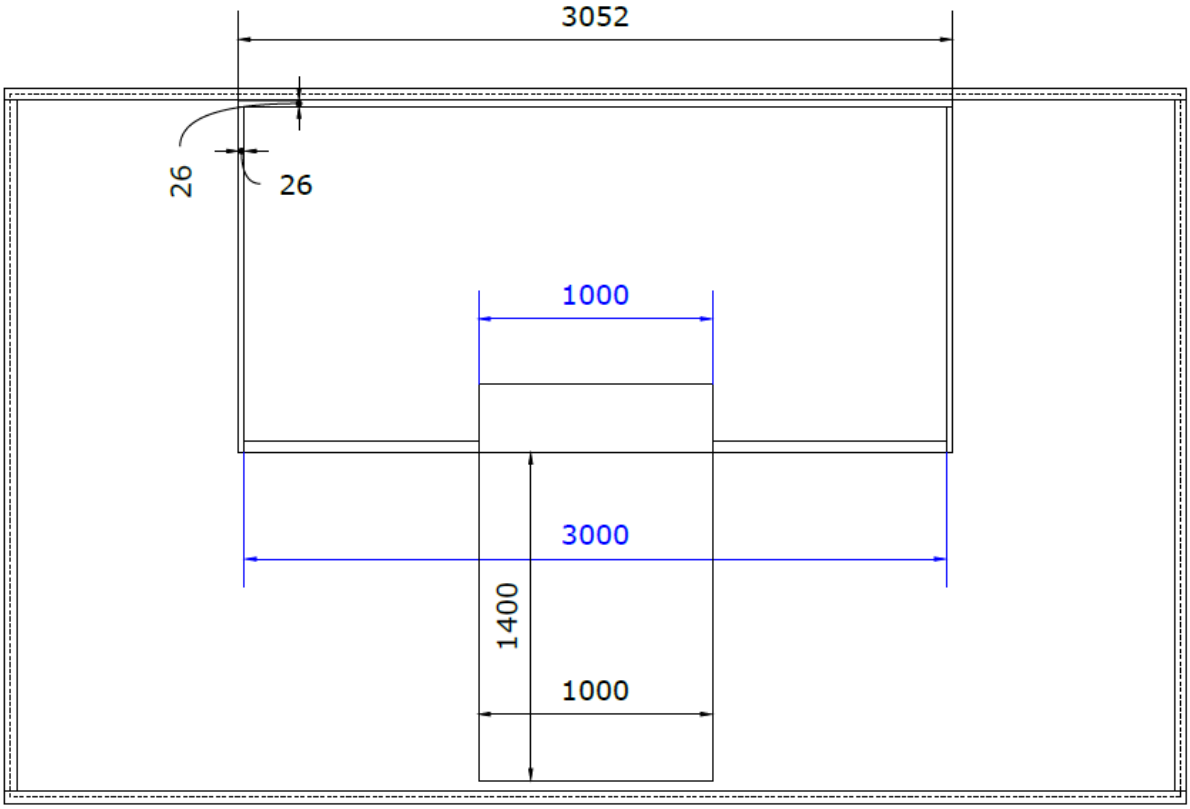

I.7.5 Free Walking

I.7.5.1 Task infrastructure

Units	Object description	Details / Model	Source
2	Door mat	Österild (large, 60x90cm)	IKEA

I.7.5.2 General task set-up

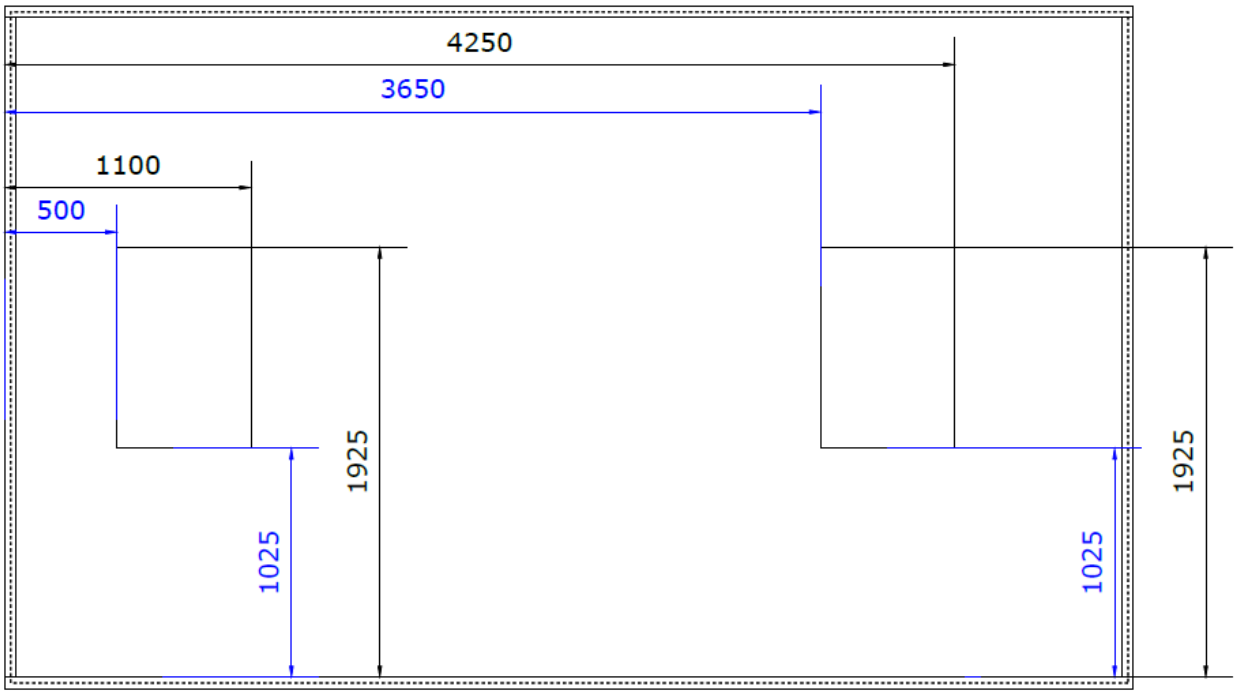

I.7.5.3 Infrastructure dimensions

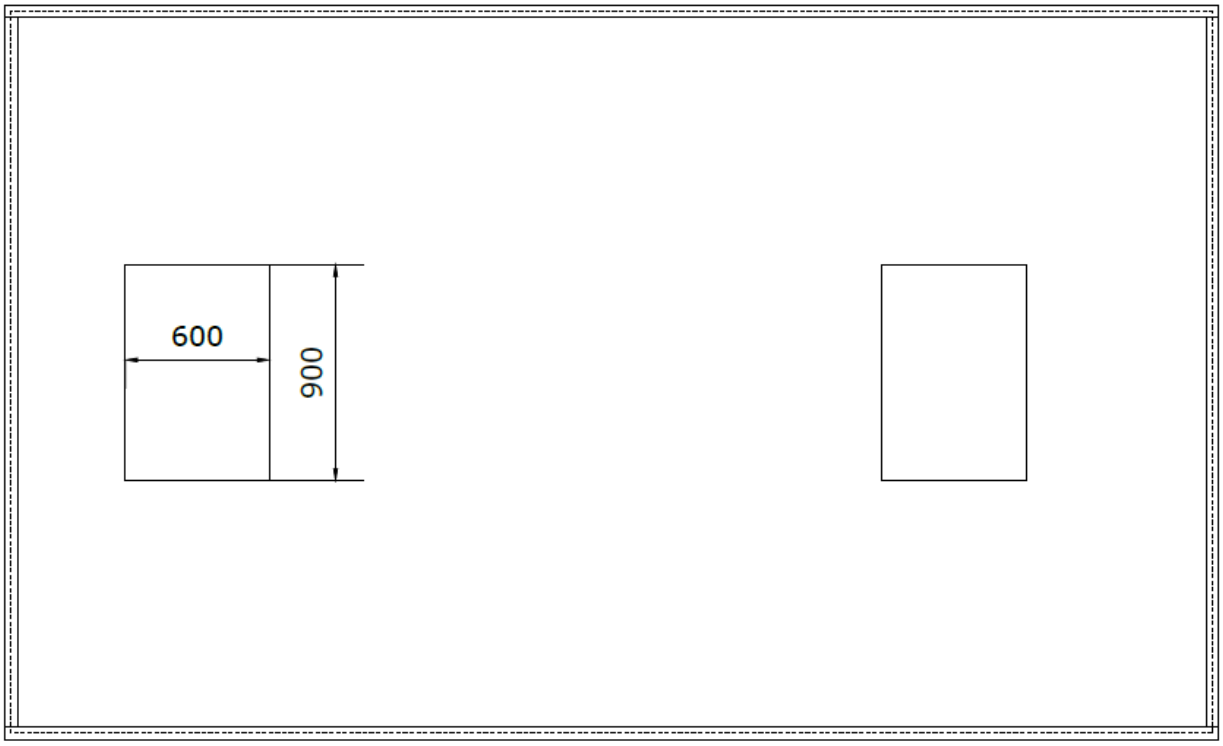

I.7.6 Crowd

I.7.6.1 Task infrastructure

Units	Object description	Details / Model	Source
2	Table	Stensele, 70cm diameter, 75cm height	IKEA
2	Robotic kit	Thymio is the robotic kit selected for the competition and must be used at all local hubs. Please reach out directly to the Thymio team (sales@mobsya.org) and mention that you are part of the competition to enjoy a 22% price reduction. Transportation costs and customs fees will be borne by the ordering institution. The program to be loaded on to the Thymios can be downloaded from the dashboard for registered teams: 20231220_EXO_WHL_ROB__CROWD__Thymio-Program.aesl	Thymio
2	Robot cover, red	3D-printed from the file on the CYBATHLON dashboard for registered teams: 20231129_EXO_WHL_ROB__CROWD__ROBOT_COVER.stl	PRUSA
2	Robot cover to be wheeled, red	3D-printed from the file on the CYBATHLON dashboard for registered teams: 20231129_EXO_WHL_ROB__CROWD__ROBOT_COVER_WHEEL.stl	PRUSA
4	Wheel	3D-printed from the file on the CYBATHLON dashboard for registered teams: 20231129_EXO_WHL_ROB__CROWD__WHEEL.stl	PRUSA (any color)
4	Wheel axle	Aluminium, 10 mm diameter, 38 mm length, 1 mm thickness	custom made
8	Pipe connector, red	3D-printed from the file on the CYBATHLON dashboard for registered teams: 20231129_EXO_WHL_ROB__CROWD__PIPE_CONNECTOR.stl	PRUSA
4	Aluminium pipe, red	Aluminium, 10 mm diameter, 750 mm length, 1 mm thickness, connecting connector cover and table leg, to be coloured by hub	custom made
2	Table leg connector, black	3D-printed from the file on the CYBATHLON dashboard for registered teams: 20231129_EXO_WHL_ROB__CROWD__TABLE_LEG_CONNECTOR.stl	PRUSA
4	Cover extension, red	Wood, rod, 12 mm diameter, 500 mm length	custom made
4	Cover extension sphere, red	3D-printed from the file on the CYBATHLON dashboard for registered teams: 20231129_EXO_WHL_ROB__CROWD__EXTENSION_SPHERE.stl	PRUSA
8	Tape pattern	black-white-black	Custom made

I.7.6.2 General task set-up

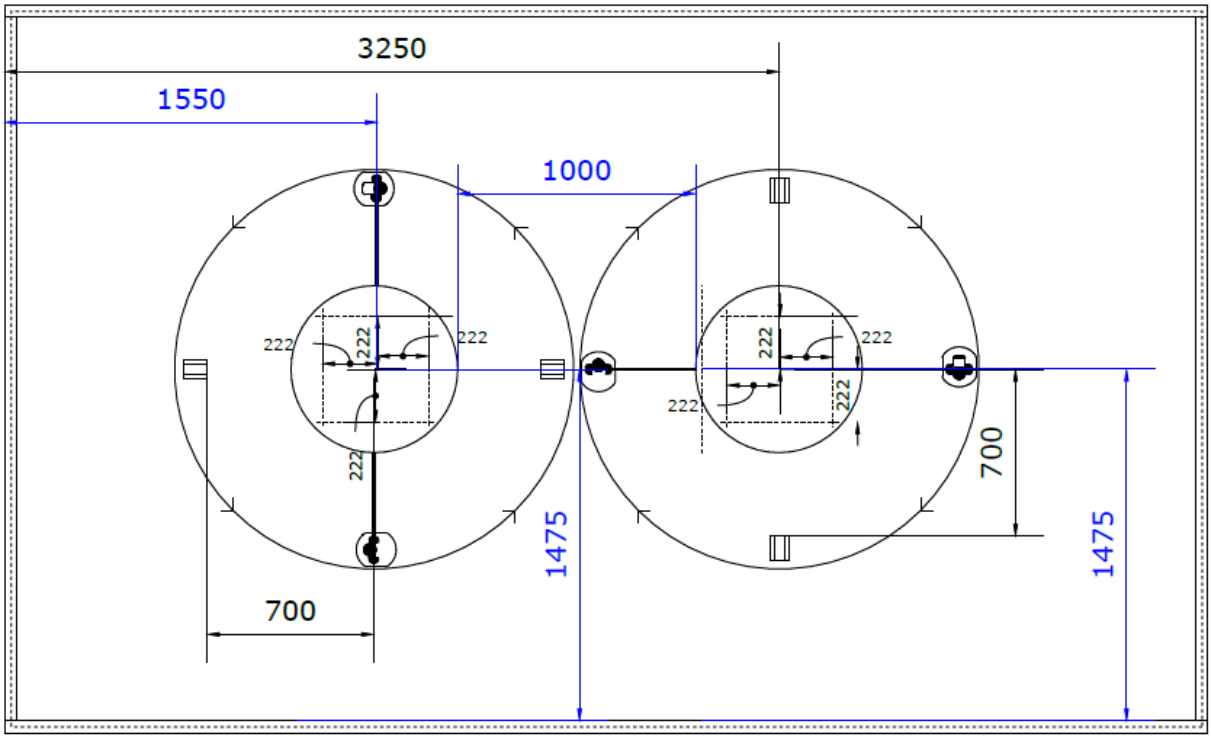

Reference mark at all four cardinal directions around each table (8 marks in total). In the figure above 4 marks are coverd by the Thymio robots.

The carpet below the robots do not have any bumbs to avoid unwanted stopping of the robots.

I.7.6.3 Infrastructure dimensions

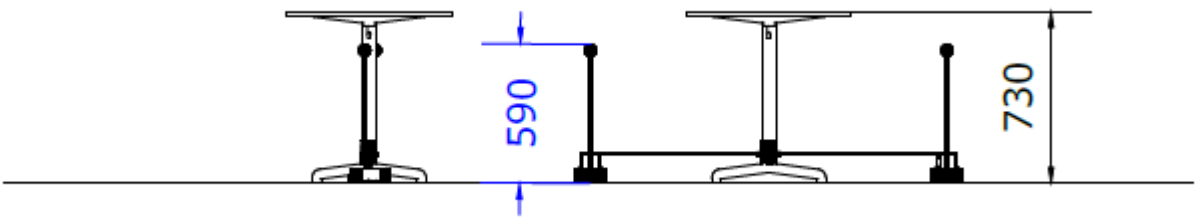

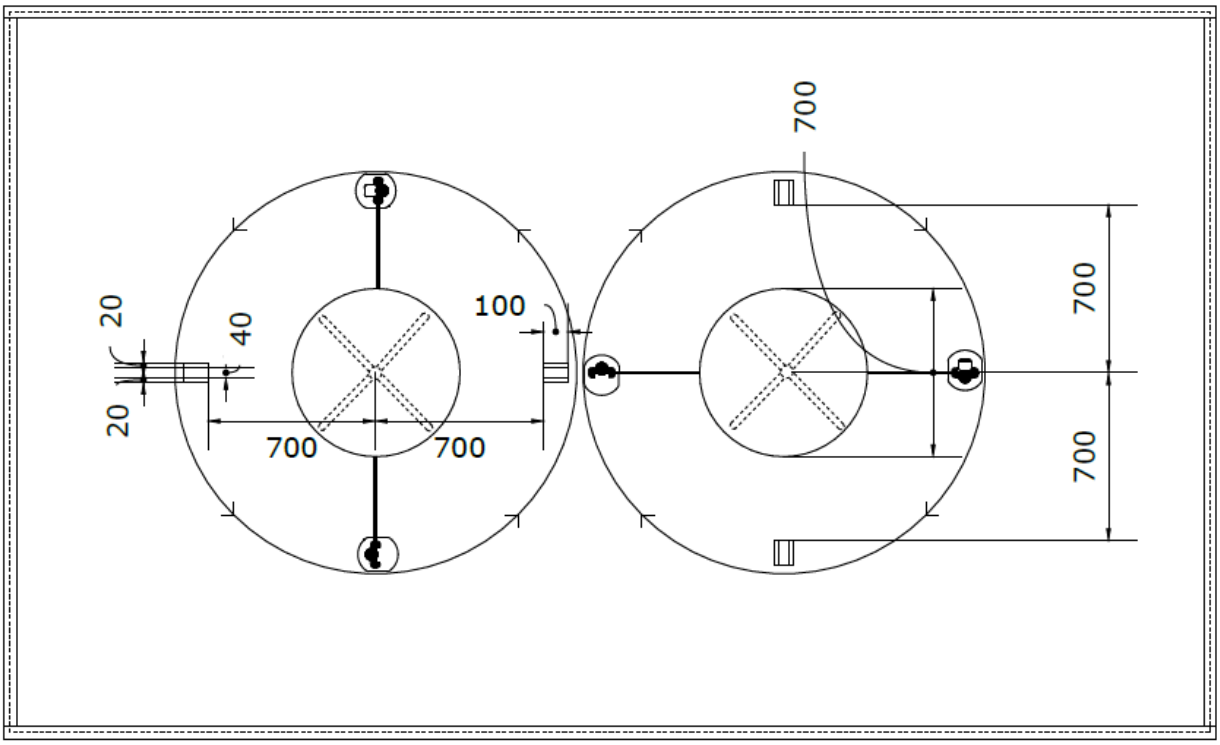

I.7.6.4 Robot bearing – assembly information

Units	Object description (all from the task material list above)
2	Robotic kit
2	Robot cover, **red**
2	Robot cover to be wheeled, **red**
4	Wheel
4	Wheel axle
8	Pipe connector, **red**
4	Aluminium pipe
2	Table leg connector, black
4	Cover extension, **red**
4	Cover extension sphere, **red**
Units	**Tools**
	Adhesive or Hot Glue
	Tape

For a visual reference, check out 20231129_EXO_WHL_ROB__CROWD__ASSEMBLY.step *or pictures below*

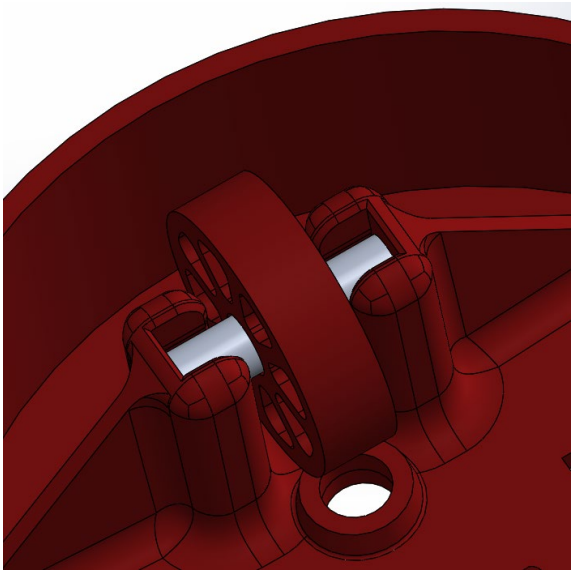

Popped in *wheel axle* with *wheel*

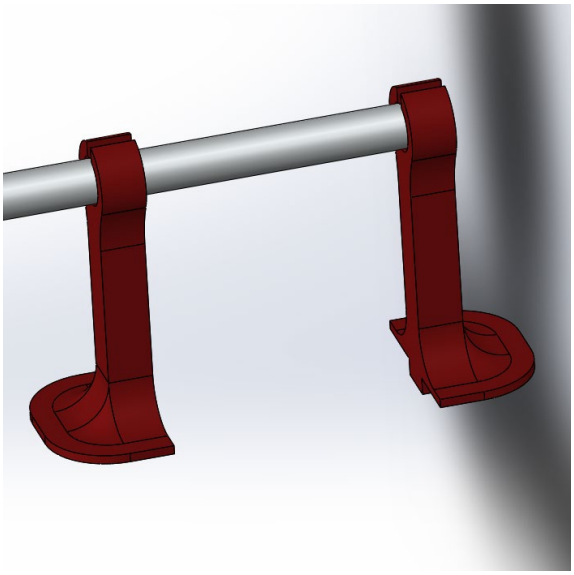

Pipe connector with the *aluminium pipe*

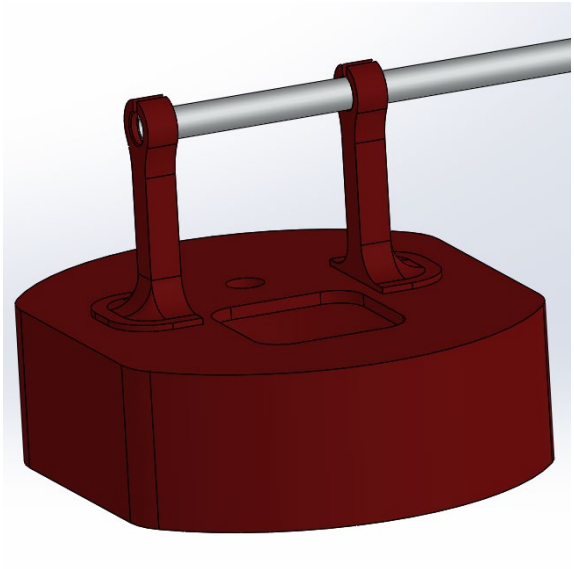

Pipe connector on *robot cover*

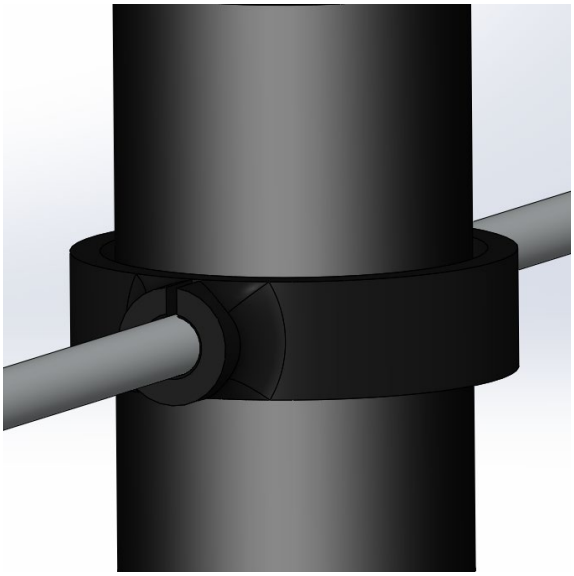

Aluminium pipe connected to *table leg connector*

1) Mark the spots where the *Stensele* tables must be on the task floor.
2) Around each table, use the tape pattern to make the four marks as indicated in the drawing above.
3) Unscrew the feet of the *Stensele* bar table. Put the *table leg connector* on the middle of table leg. Re-screw the feet back on the *Stensele* and put it on the spot for the task.

4) Put the *wheel* in the middle of the axle. Use a little force to plug the *wheel axle* into the axle mounting of the *robot cover to be wheeled*. Repeat for all wheels. (see figures below)
5) Push the *aluminium pipe* into two *pipe connectors*.
6) Put the *pipe connector* in the square holes of the *robot covers*. The feet should look outwards. Use an adhesive between feet and the covers.
7) Put one *robot cover* and one *robot cover to be wheeled* on opposite positions right in front of the mark (as indicated in the drawing above).
8) Connect the *aluminium pipe* with the *table leg connector*.
9) Plug in the Thymio robot under the *robot cover*.
10) Put the *cover extension* in the holes of the covers. Use the tape to increase friction if the poles slide through too easily.
11) Put the *cover extension sphere* on the poles.

I.7.7 High Step

I.7.7.1 Task infrastructure

Units	Object description	Details / Model	Source
3	Box		custom made
1	Boxes fixation system		custom made

I.7.7.1.1 Dimensions of boxes

	Box 1	Box 2	Box 3
Height [mm]	180	220	260
Length [mm]	300	290	330

I.7.7.2 General task set-up

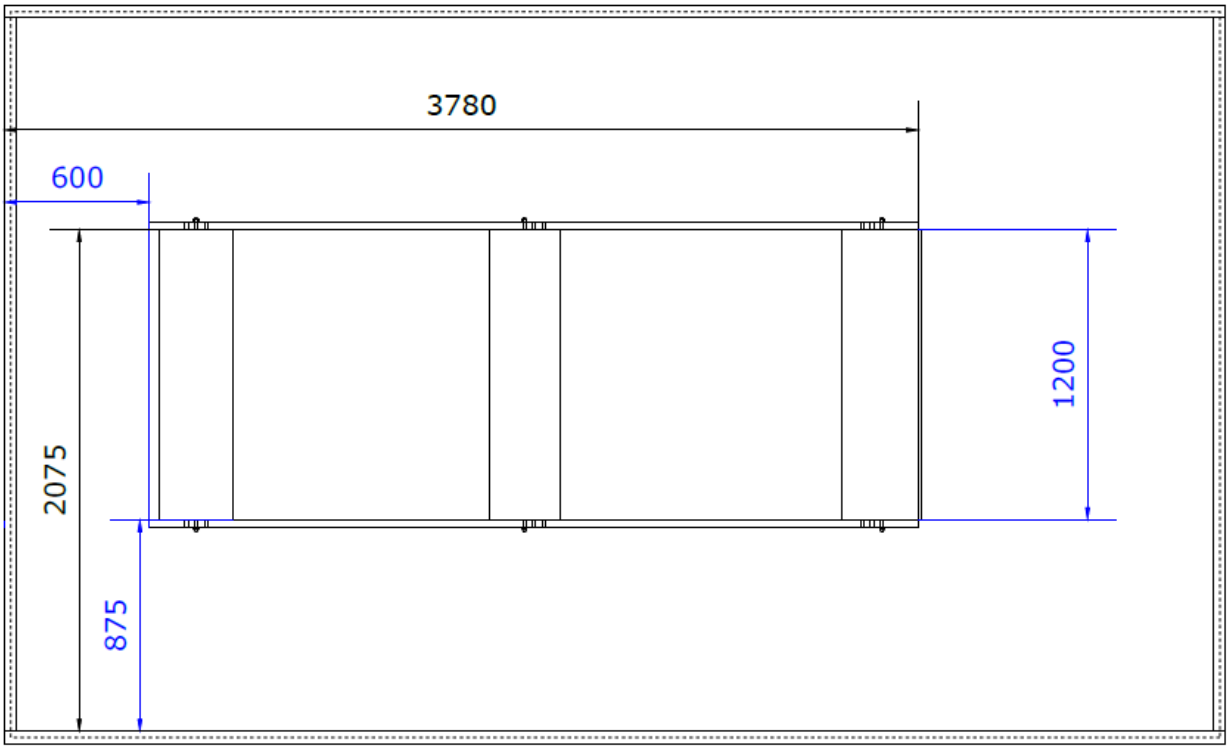

I.7.7.3 Infrastructure dimensions

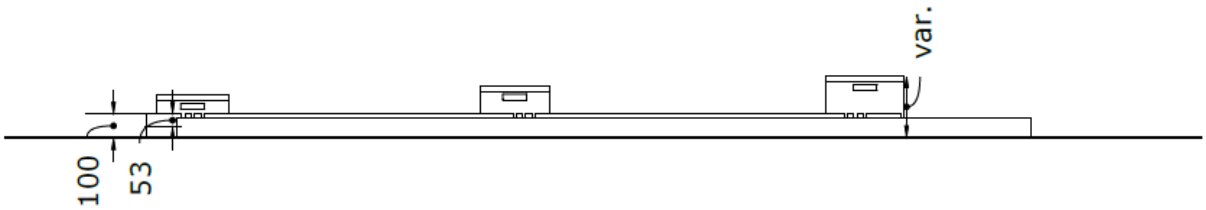

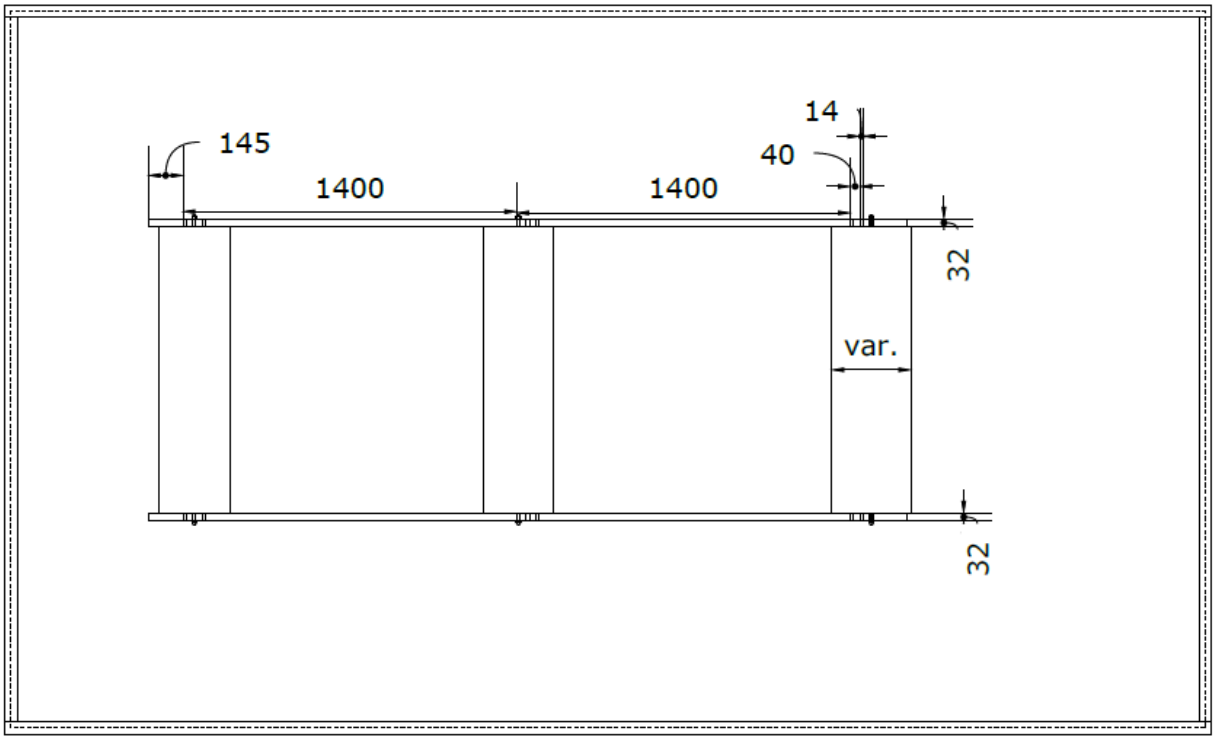

I.7.7.4 Boxes fixation system - assembly information

	
The boxes are attached to the lateral boxes fixation system with threaded nuts on a M10 threaded rod. For safety reasons and different to the pictures above we suggest to shorten the rod that protrudes the lateral fixation to a minimum and to use a self-locking nut instead of a butterfly nut.	

I.7.8 Door

I.7.8.1 Task infrastructure

Units	Object description	Details / Model	Source	Provided by CYBATHLON
1	Doorframe rack	wood, CYBATHLON uses MDF	custom made	
1	Doorframe	Pertura CPL white	Hornbach	
1	Door left	Pertura Yori CPL white, left	Hornbach	
1	Door handle	Pertura BB Vitur alu F1	Hornbach	To local hubs only
1	Door knob		Hornbach	To local hubs only

I.7.8.2 General task set-up

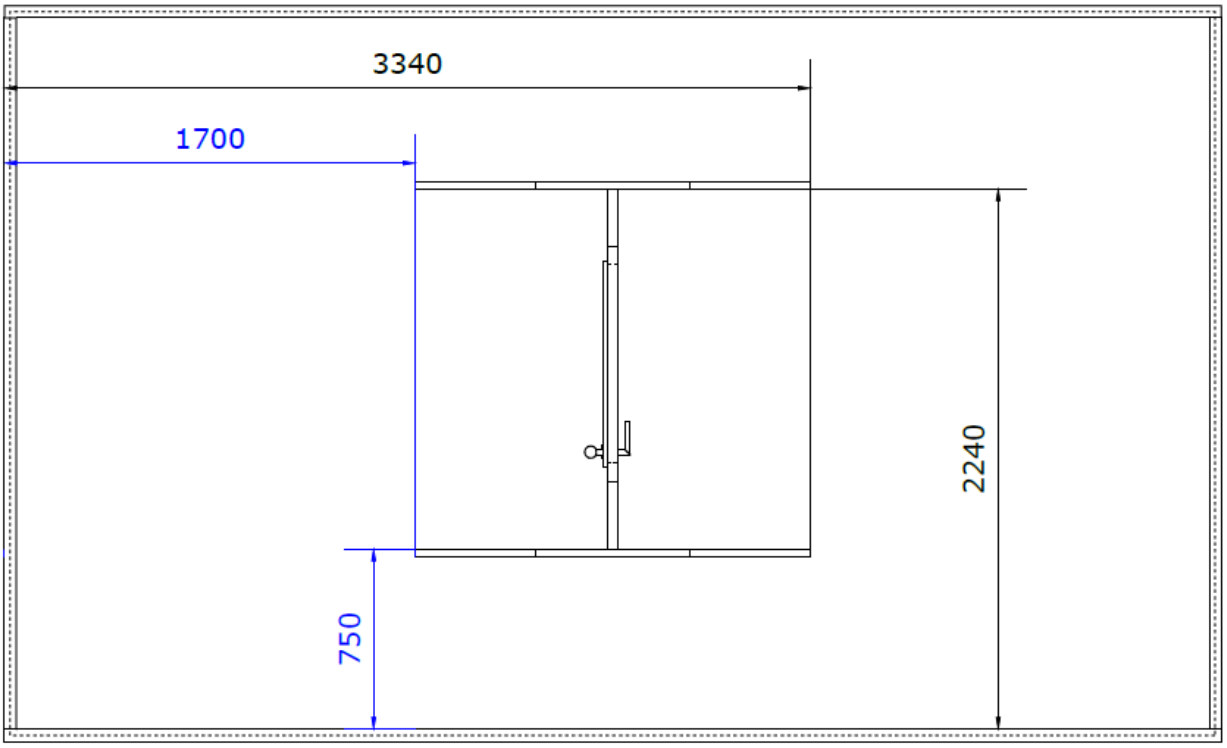

I.7.8.3 Infrastructure dimensions

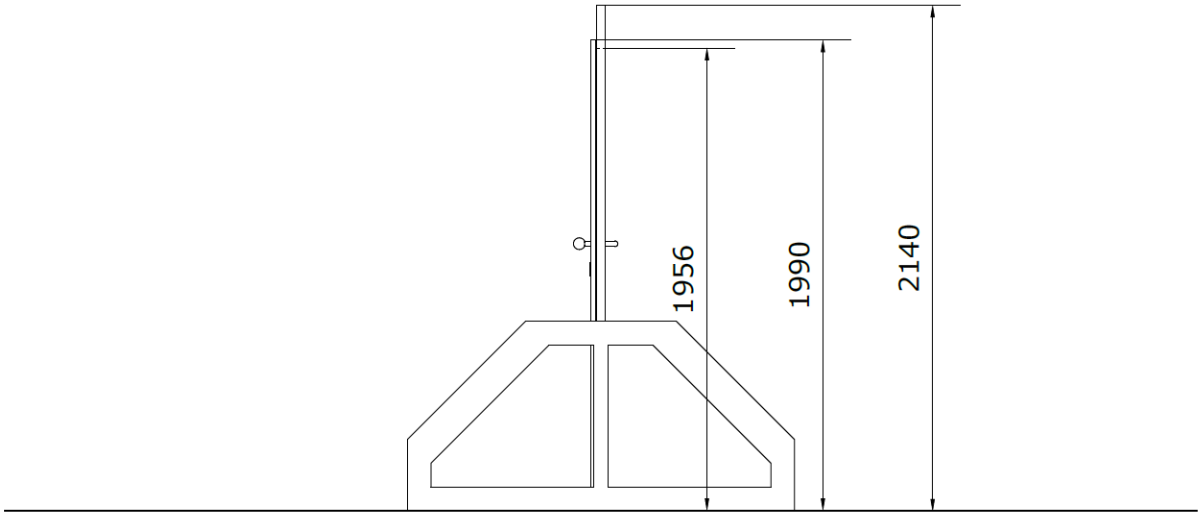

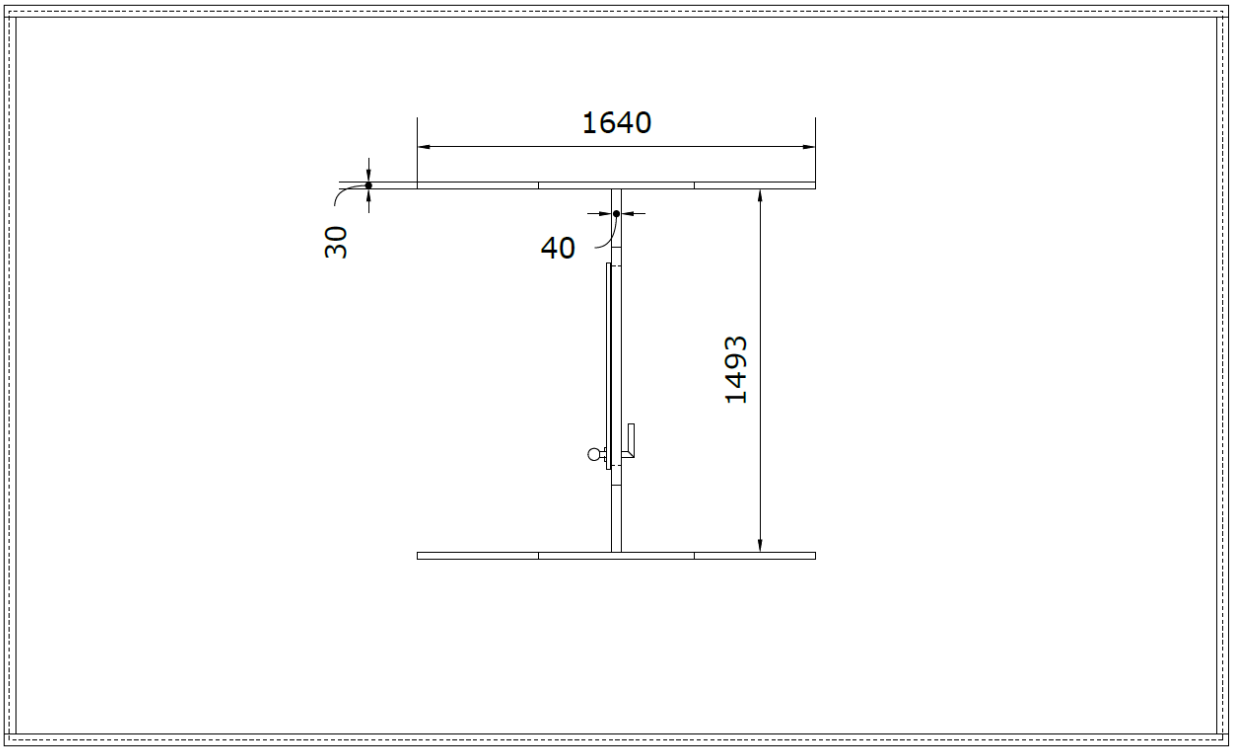

I.7.8.4 Door - assembly information

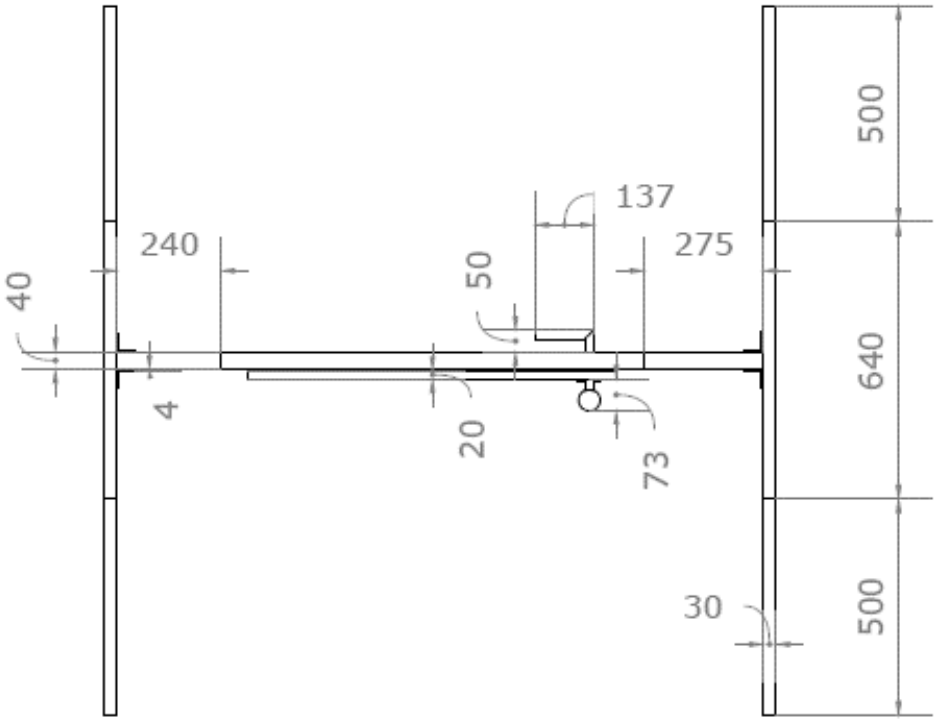

I.7.9 Stony Path

I.7.9.1 Task infrastructure

Units	Object description	Details / Model	Source
4	Base plate	wood, with fixtures for attachment and lateral reinforcement, holes with diameter of 22 mm (stones fixed but easy to be removed for repositioning on the base plate to allow a variation of patterns)	custom made
9	Stone	26mm height, visible surfaces of the stones may have increased friction and must be painted grey, dowels with diameter of 20mm and length of min. 20mm	custom made

I.7.9.2 General task set-up

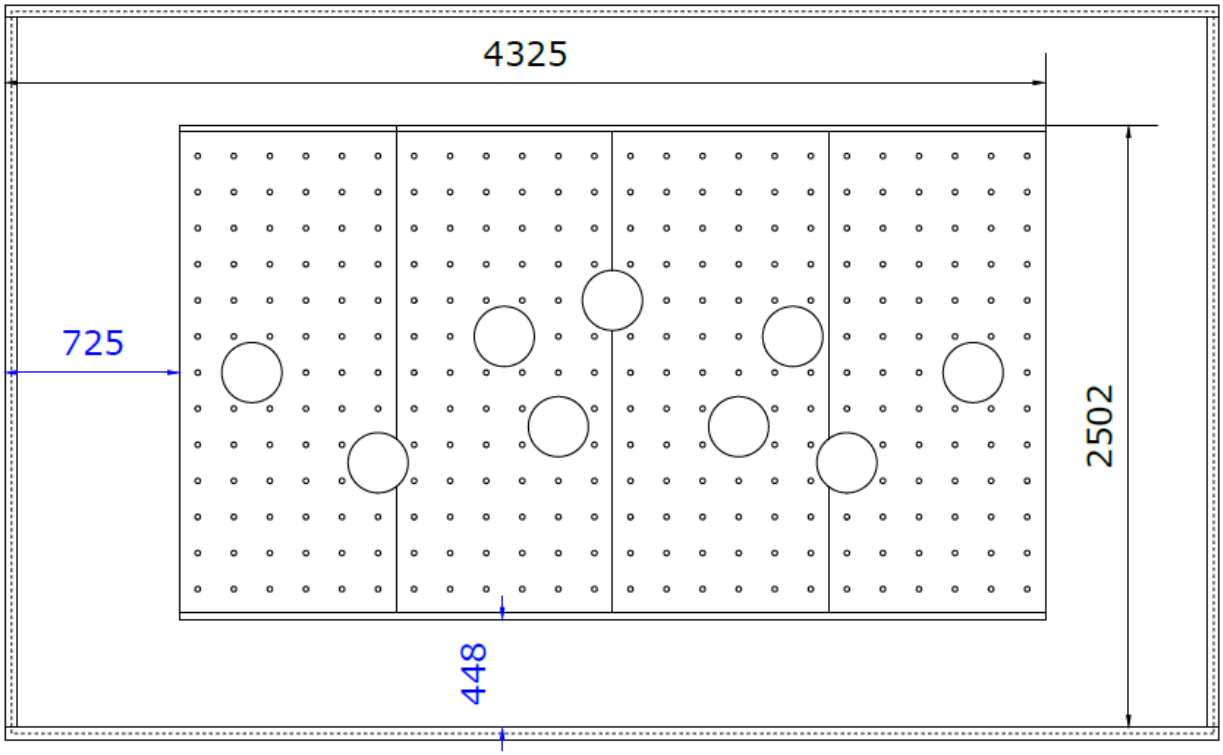

I.7.9.3 Infrastructure dimensions

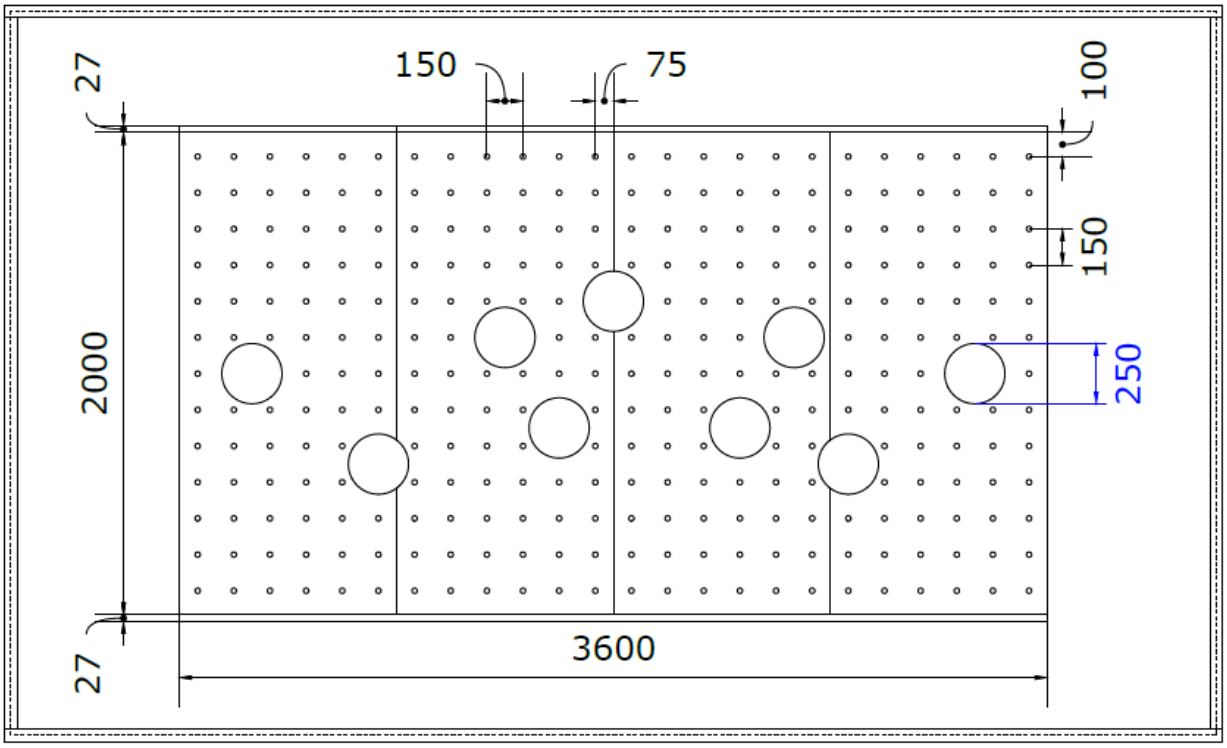
27
150
75
100
150
2000
250
27
3600

I.7.10 Kitchen

I.7.10.1 Task infrastructure

Units	Object description	Details / Model	Source	Provided by CYBATHLON
1	Shelving unit	Kallax 1x4	IKEA	
1	Insert with 2 drawers	Kallax, black or black-brown, only lower drawer has a handle mounted	IKEA	
1	Basket	Lurpassa (big), 17.5x12.5x12 cm,	IKEA	
1	Bread surrogate	foam (RG80)	custom made	To all registered teams
1	Table	Sandsberg	IKEA	
1	Butcher's block	Aptitlig	IKEA	
1	Bread knife	Vardagen	IKEA	

I.7.10.2 General task set-up

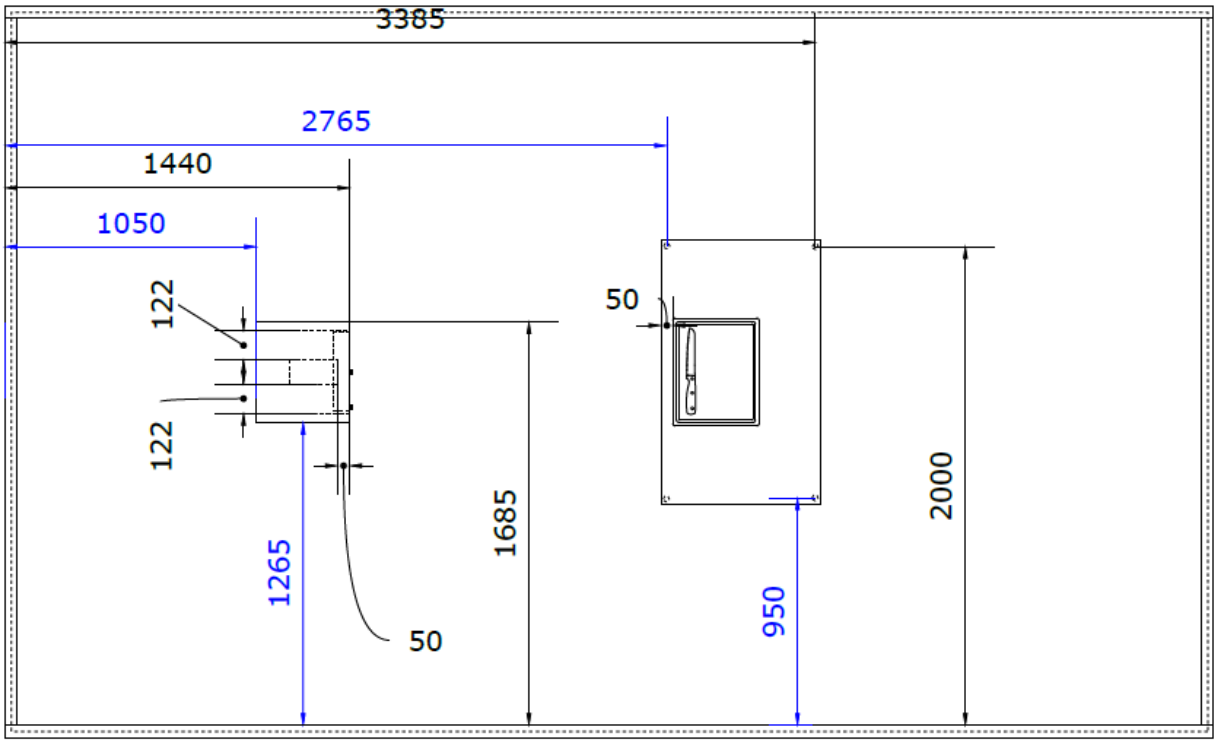

I.7.10.3 Infrastructure dimensions

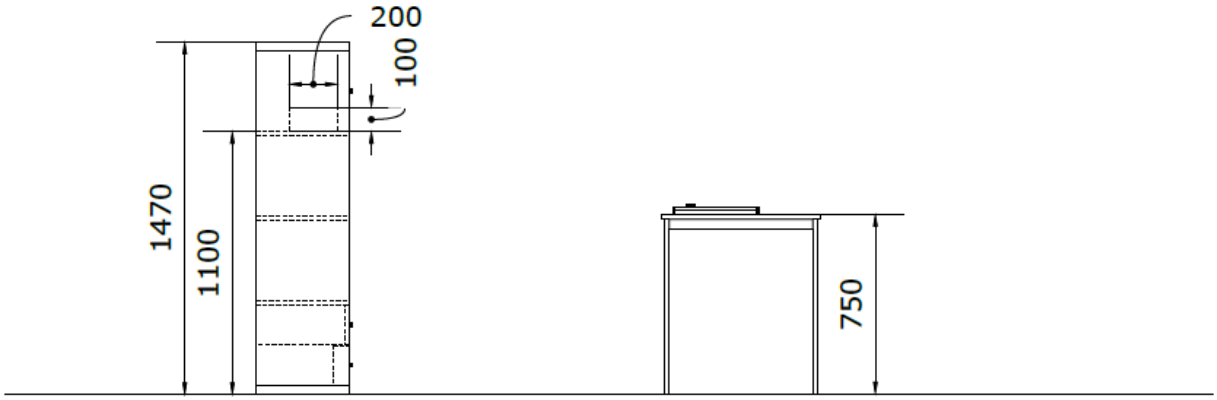

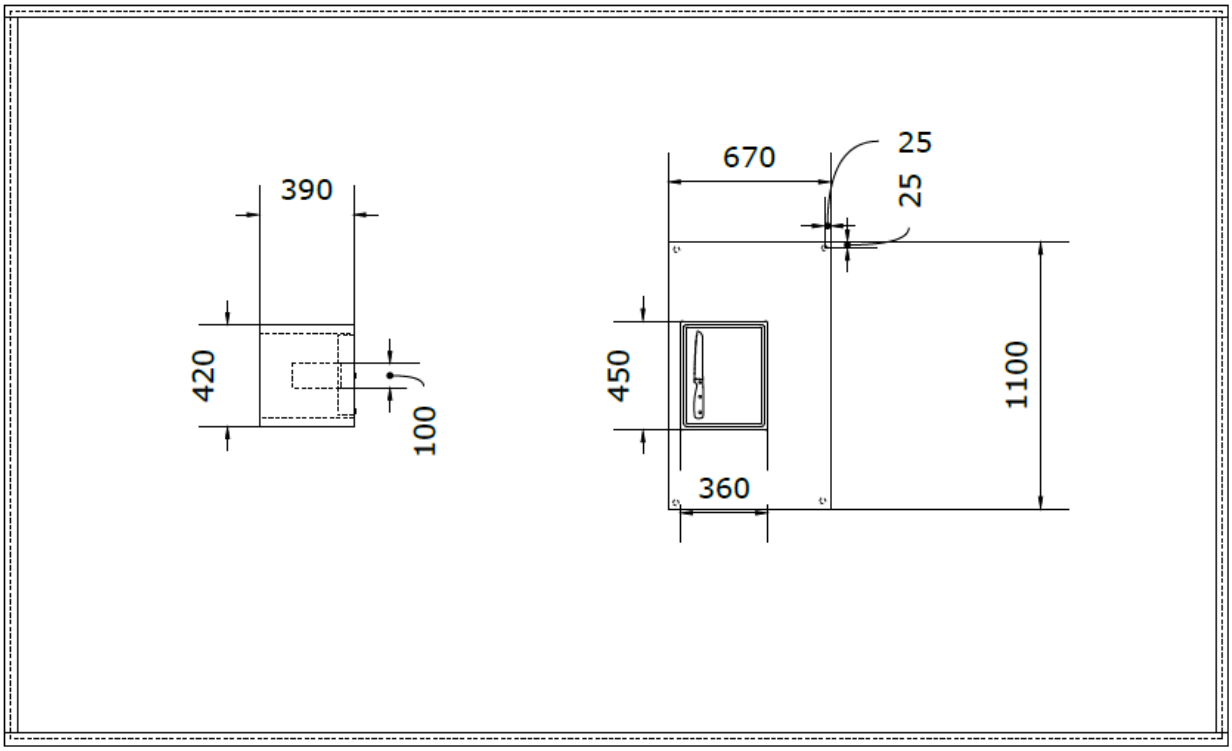

I.8 WHL

I.8.1 Restaurant

I.8.1.1 Task infrastructure

Units	Object description	Details / Model	Source
2	Table	Sandsberg, 1 long edge marked with a white tape	IKEA
2	Wooden strip, white	wood, to be mounted below the long edge marked with a white tape	Custom made
2	Tape strip, white	to be mounted on the table	Custom made
2	Shelving unit	Kallax 2x2	IKEA

I.8.1.2 General task set-up

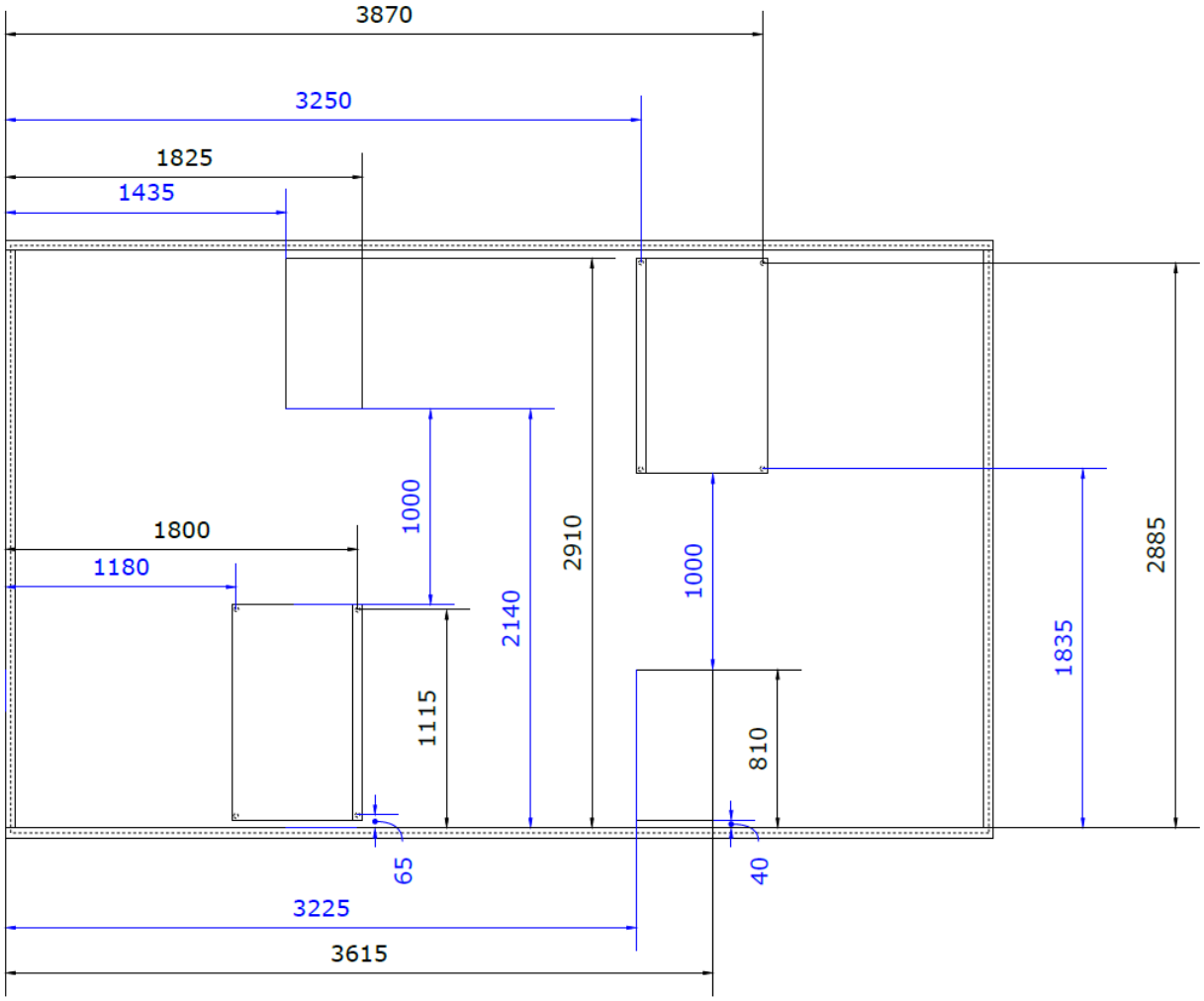

I.8.1.3 Infrastructure dimensions

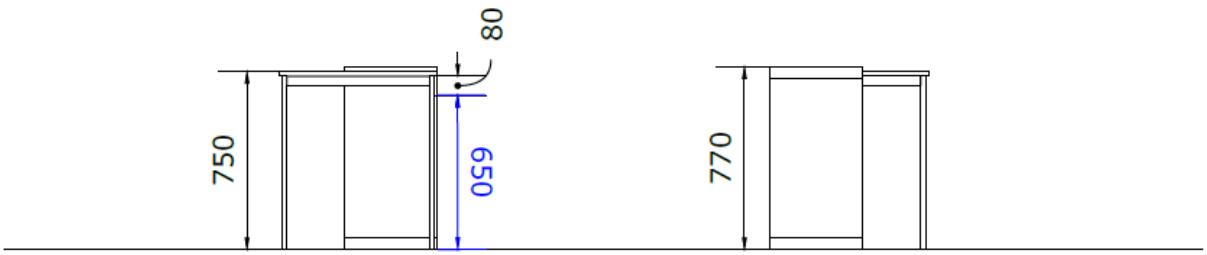

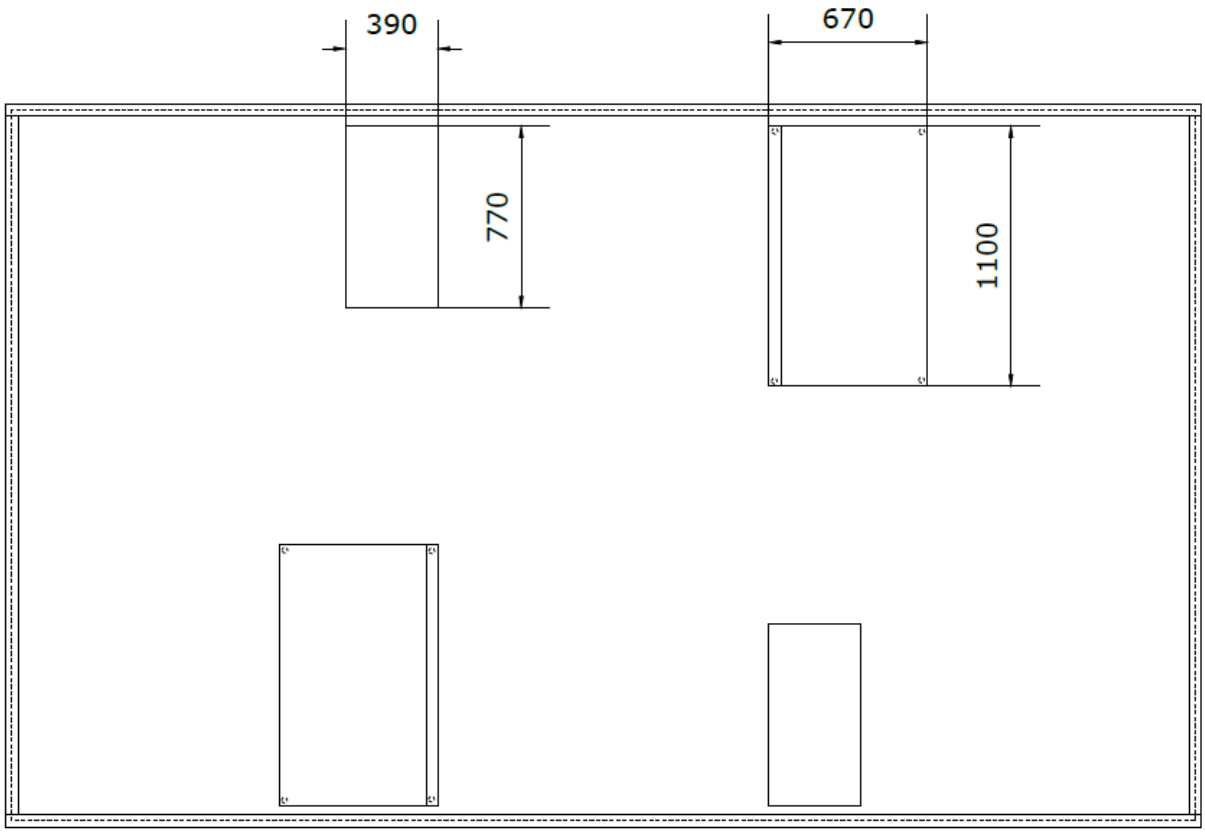
390
670
770
1100

I.8.2 Stairs

I.8.2.1 Task infrastructure

Units	Object description	Details / Model	Source
1	Stairs	wood, optionally with recessed checker plate edge protection on each step (30-50cm, max. thickness of 5mm), CYBATHLON uses multi-layer solid wood	custom made
2	Handrail (1 for each side)	steel	custom made

I.8.2.2 General task set-up

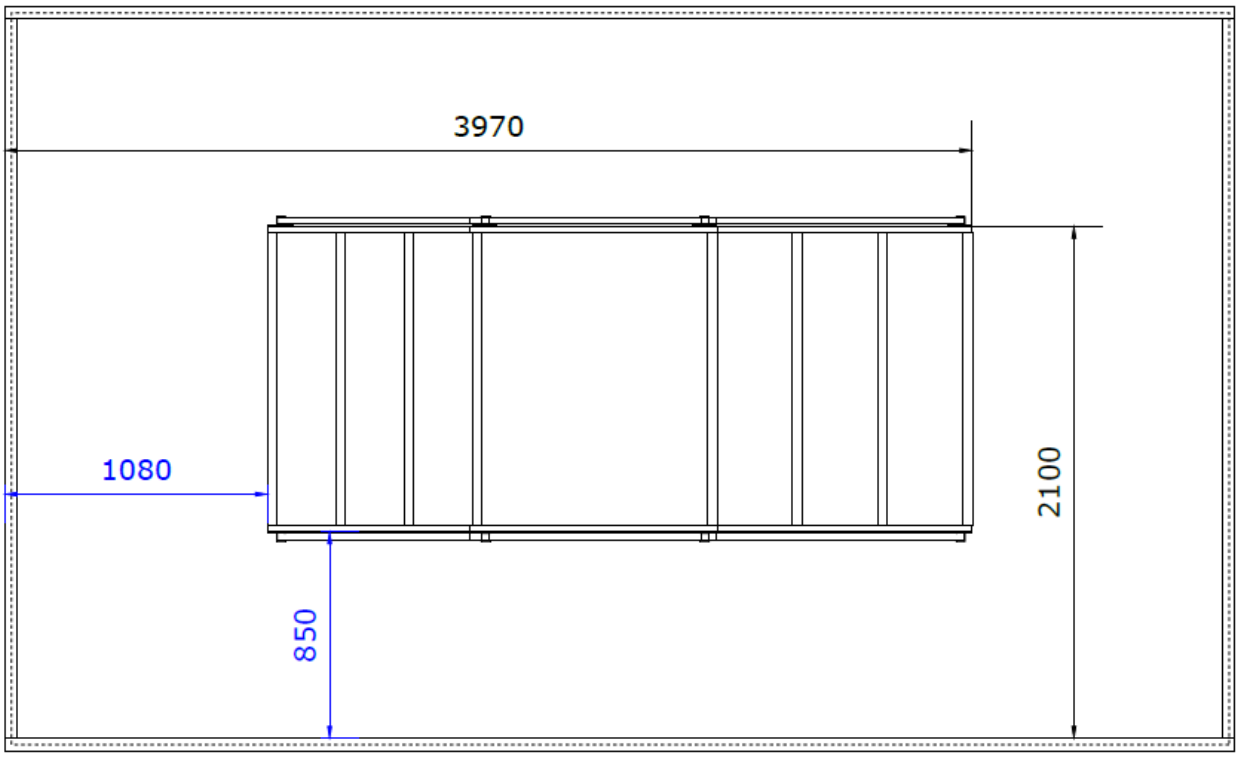

I.8.2.3 Infrastructure dimensions

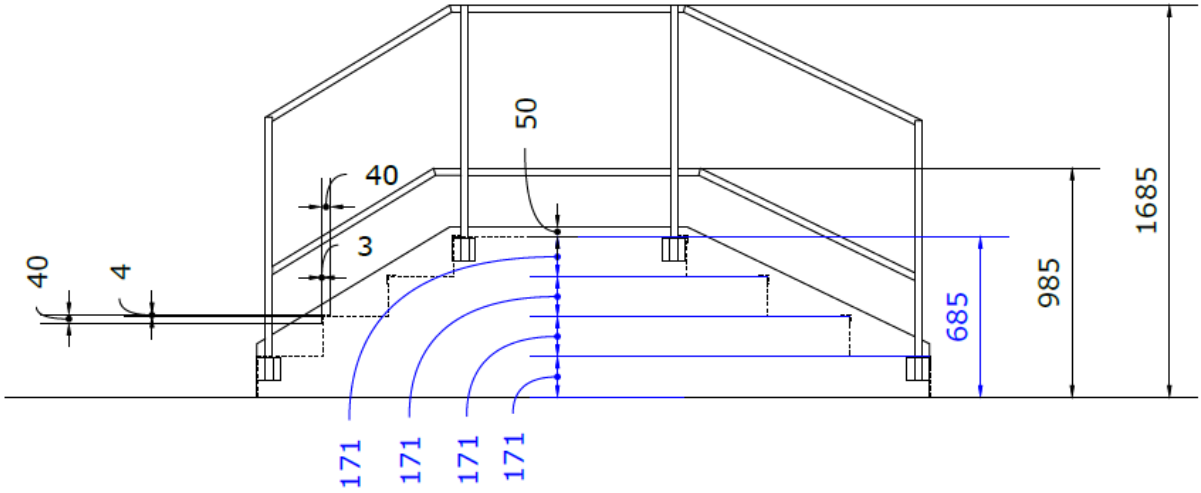

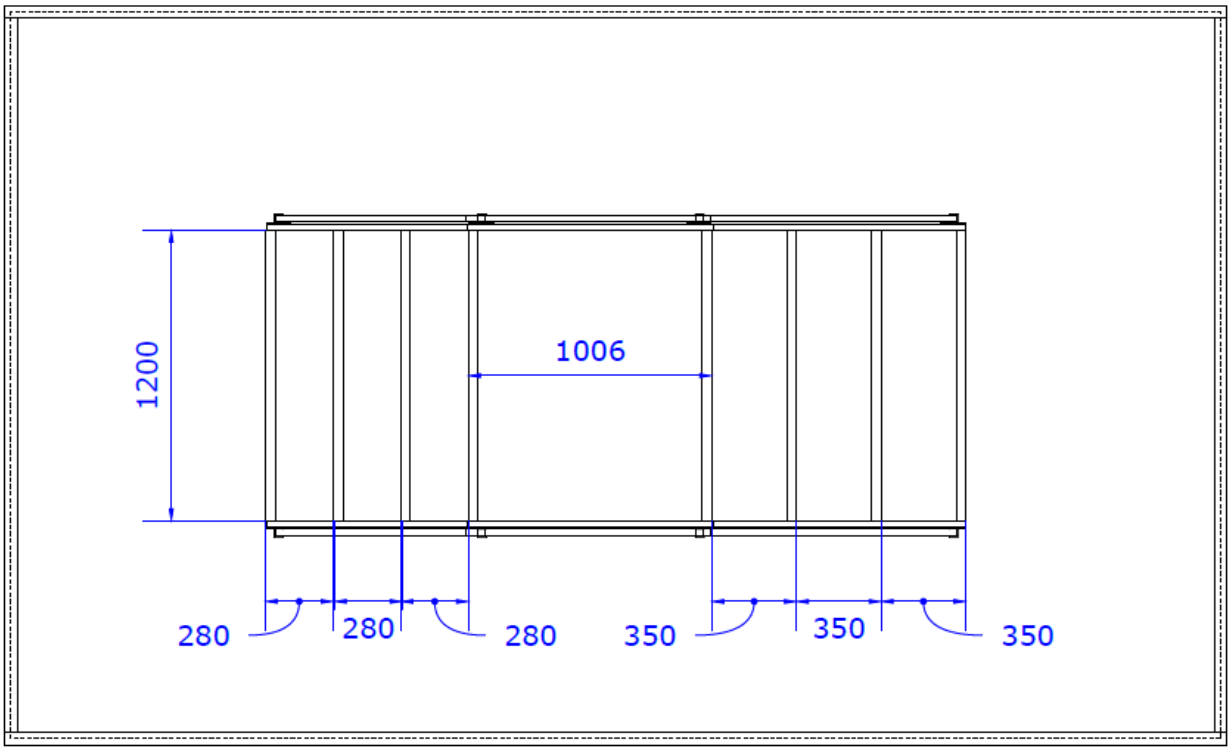

I.8.3 Pick-up

I.8.3.1 Task infrastructure

Units	Object description	Details / Model	Source
2	Table	Sandsberg	IKEA
1	PET bottle, white transparent (1.5l), filled with water	empty weight (with cap): 41g, filled with 1.5l water: 1541g, weight tolerance: +/- 50g	bottleshop
1	Bottle cap	Water closure white, Code: 12820011M1	bottleshop

I.8.3.2 General task set-up

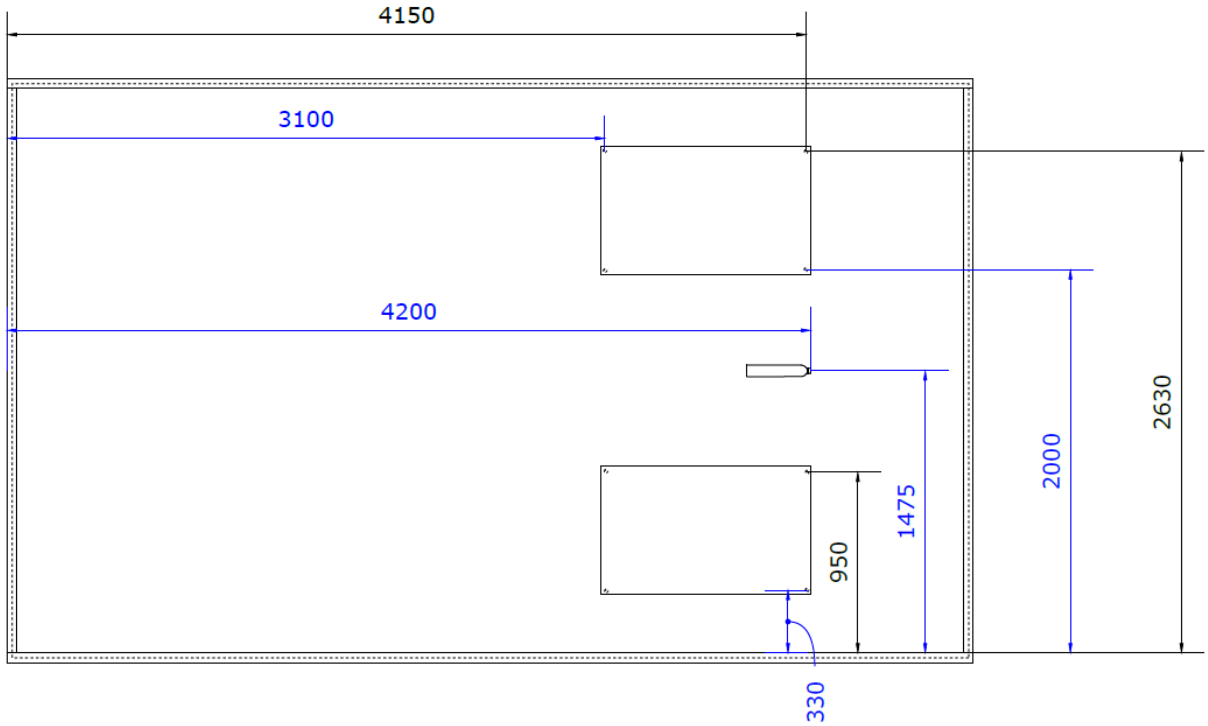

I.8.3.3 Infrastructure dimensions

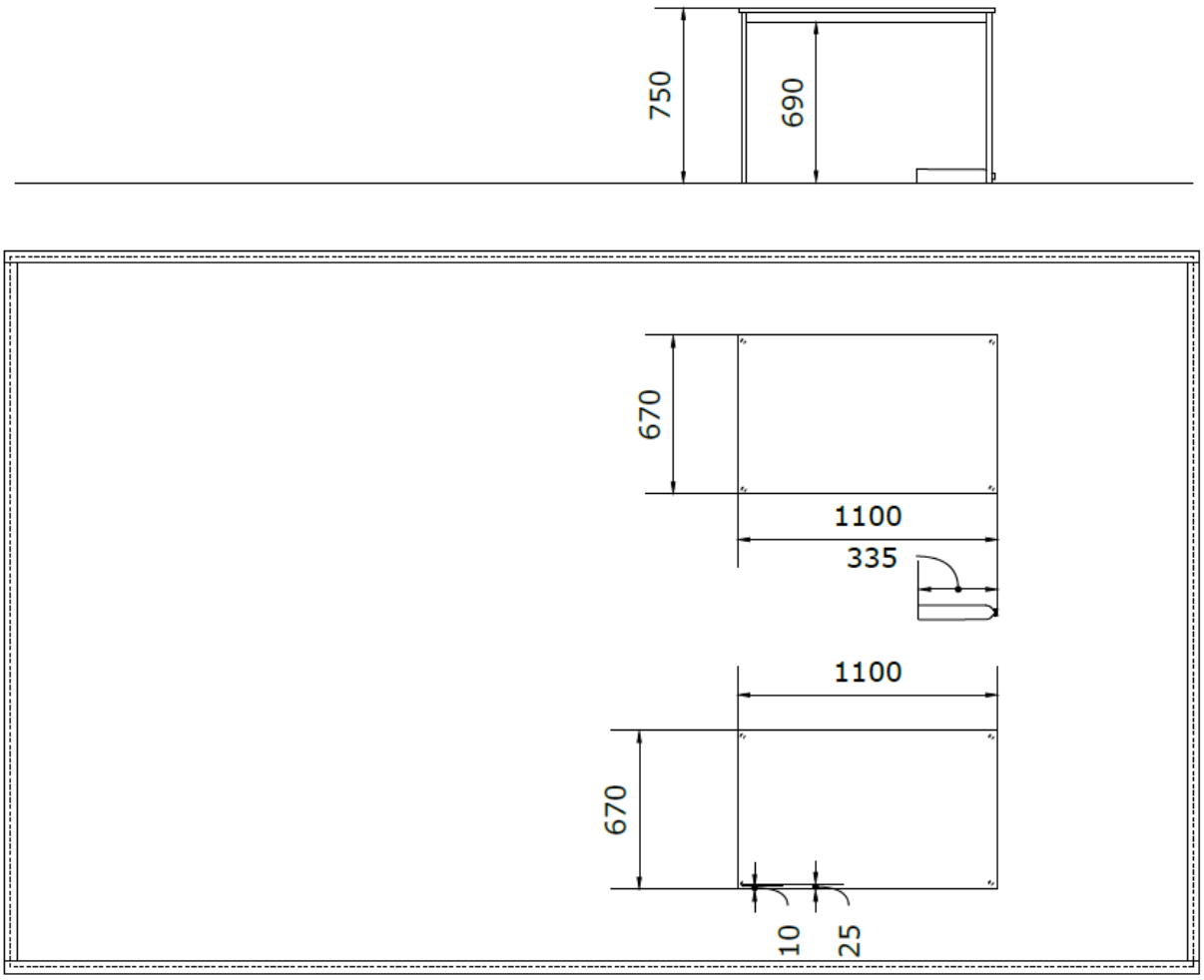

I.8.4 Tilted Path

I.8.4.1 Task infrastructure

Units	Object description	Details / Model	Source
1	Ramp (3m)	wood, top surfaces with increased friction and painted grey, white lines of 50mm width at the entrance and exit of the ramp	custom made
2	Sidewall	wood	custom made
1	Backwall	wood	custom made
2	Carpet/plate, red	thickness 3-5mm, 1 on the ramp / 1 on the floor	Custom made

I.8.4.2 General task set-up

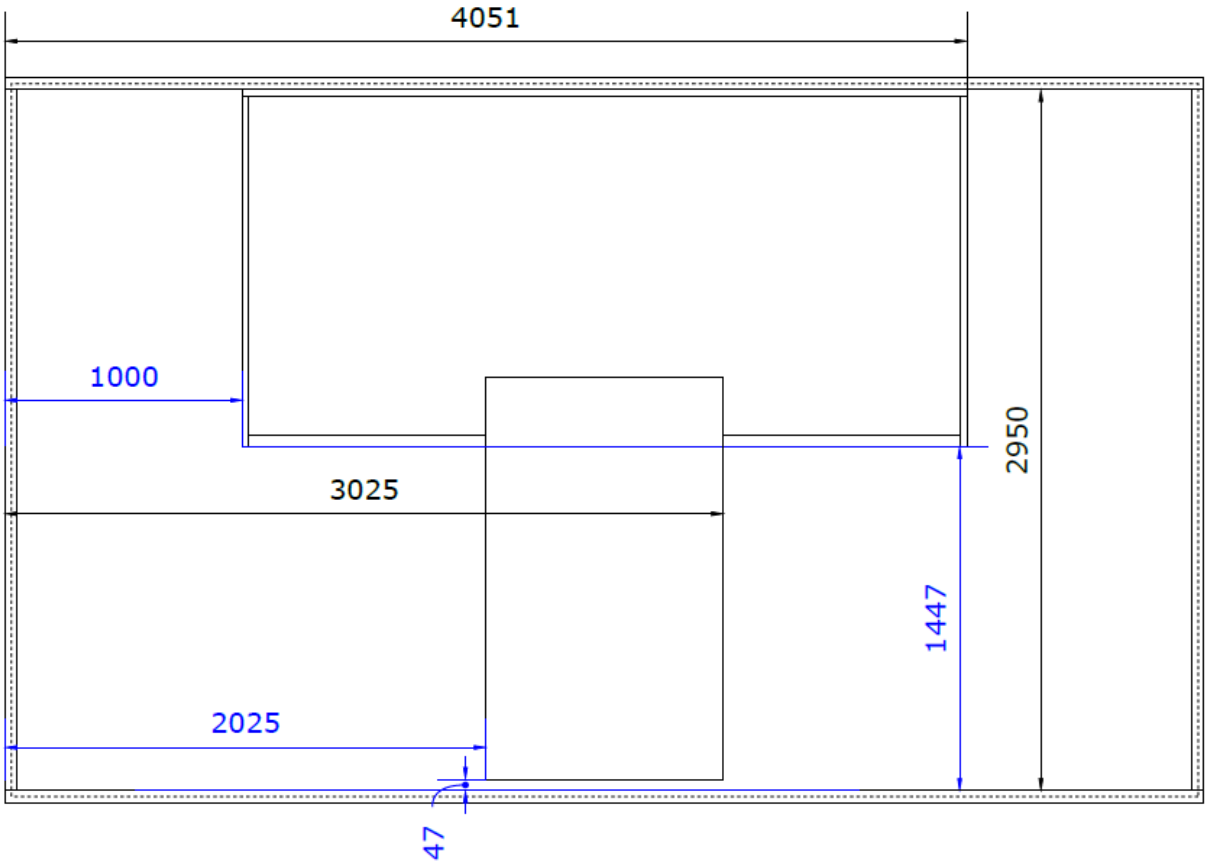

I.8.4.3 Infrastructure dimensions

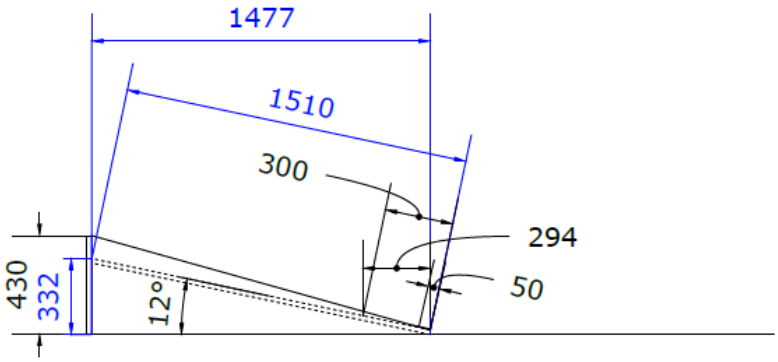

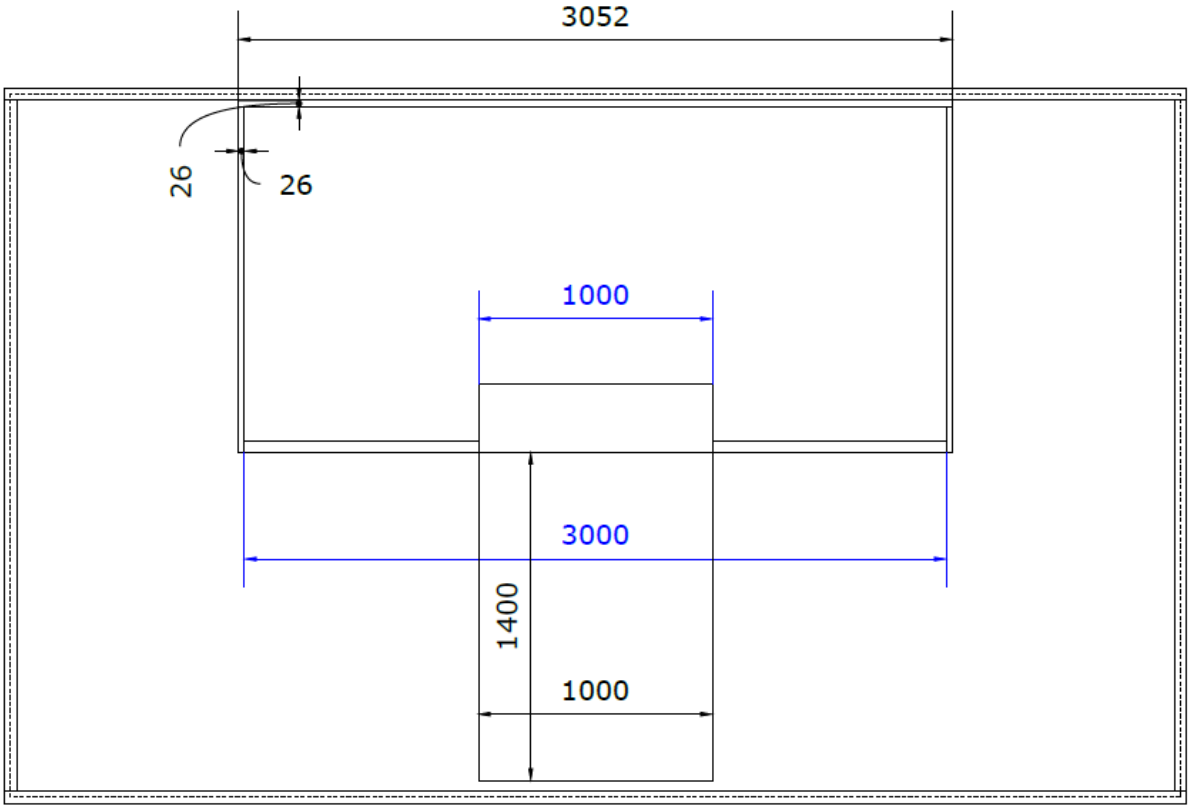

I.8.5 Uplift

I.8.5.1 Task infrastructure

Units	Object description	Details / Model	Source
1	Short rack	wood	custom made
1	Large rack	wood	custom made
24	Bar	wood, coloured	custom made

I.8.5.2 General task set-up

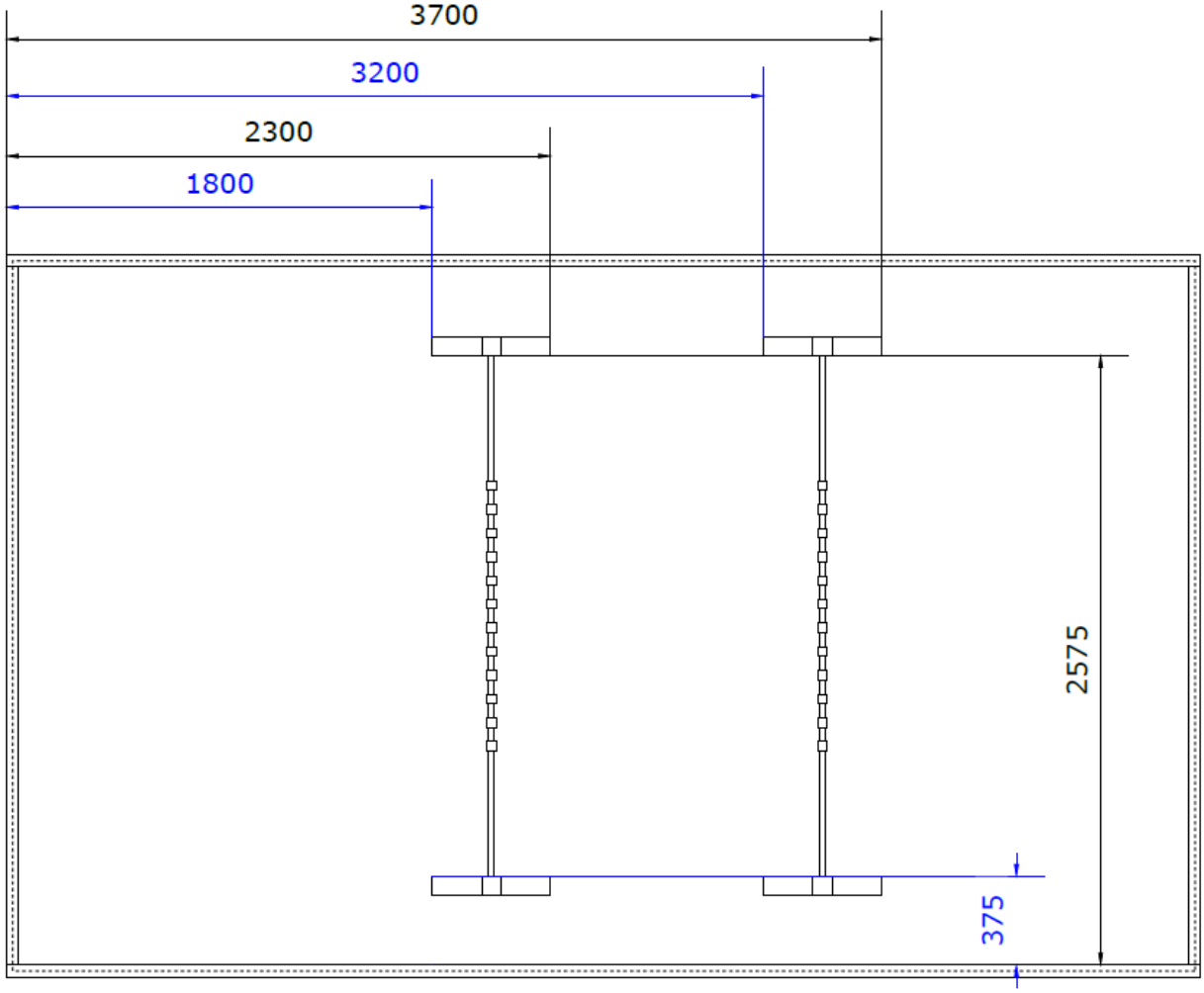

I.8.5.3 Infrastructure dimensions

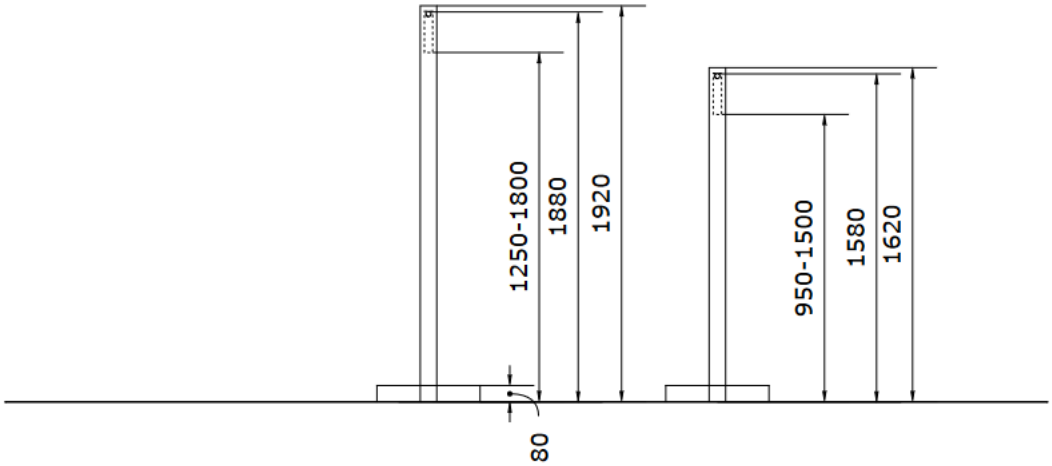

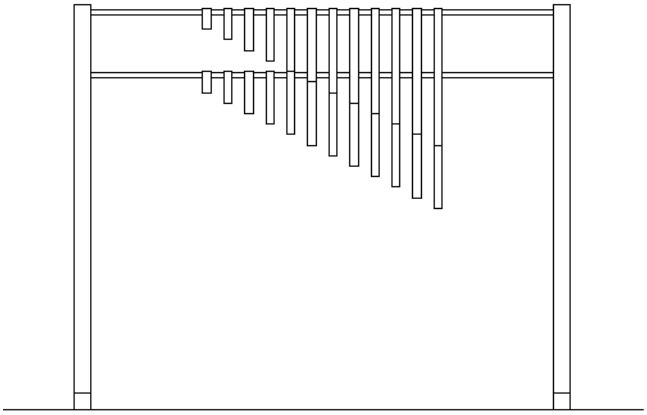

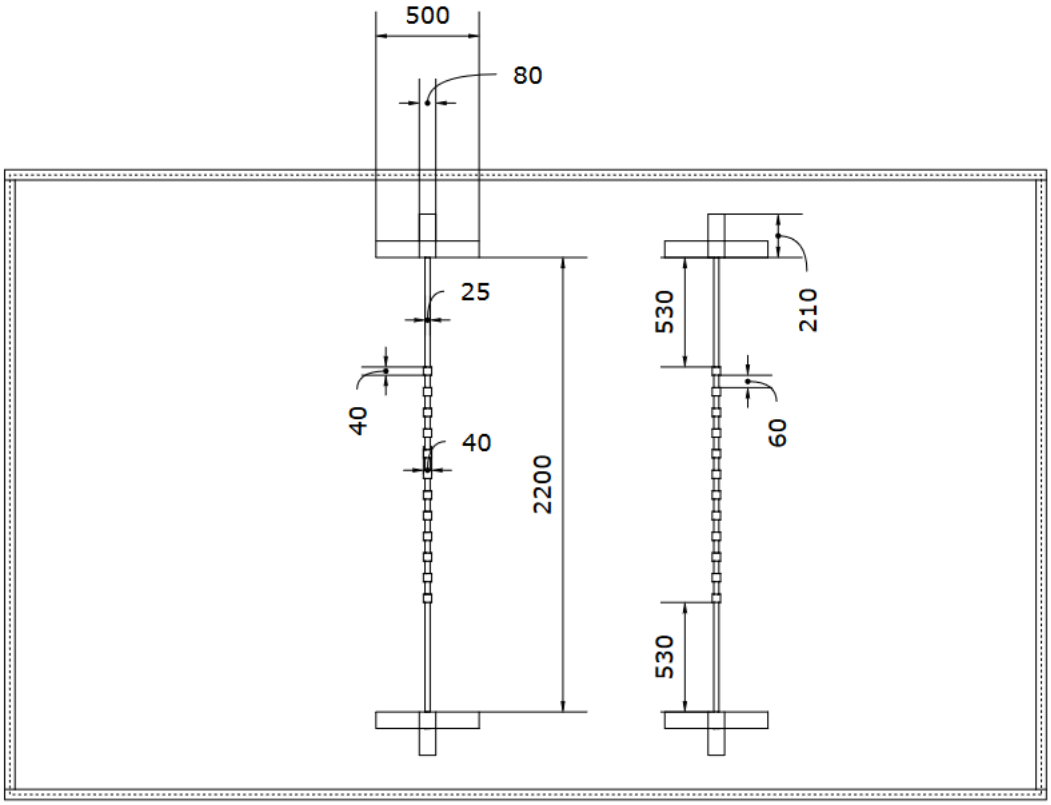
530
530
2200
40
25
40
60
210
500
80

I.8.6 Crowd

I.8.6.1 Task infrastructure

Units	Object description	Details / Model	Source
2	Table	Stensele, 70cm diameter, 75cm height	IKEA
2	Robotic kit	Thymio is the robotic kit selected for the competition and must be used at all local hubs. Please reach out directly to the Thymio team (sales@mobsya.org) and mention that you are part of the competition to enjoy a 22% price reduction. Transportation costs and customs fees will be borne by the ordering institution. The program to be loaded on to the Thymios can be downloaded from the dashboard for registered teams: 20231220_EXO_WHL_ROB__CROWD__Thymio-Program.aesl	Thymio
2	Robot cover, red	3D-printed from the file on the CYBATHLON dashboard for registered teams: 20231129_EXO_WHL_ROB__CROWD__ROBOT_COVER.stl	PRUSA
2	Robot cover to be wheeled, red	3D-printed from the file on the CYBATHLON dashboard for registered teams: 20231129_EXO_WHL_ROB__CROWD__ROBOT_COVER_WHEEL.stl	PRUSA
4	Wheel	3D-printed from the file on the CYBATHLON dashboard for registered teams: 20231129_EXO_WHL_ROB__CROWD__WHEEL.stl	PRUSA (any color)
4	Wheel axle	Aluminium, 10 mm diameter, 38 mm length, 1 mm thickness	custom made
8	Pipe connector, red	3D-printed from the file on the CYBATHLON dashboard for registered teams: 20231129_EXO_WHL_ROB__CROWD__PIPE_CONNECTOR.stl	PRUSA
4	Aluminium pipe, red	Aluminium, 10 mm diameter, 750 mm length, 1 mm thickness, connecting connector cover and table leg, to be coloured by hub	custom made
2	Table leg connector, black	3D-printed from the file on the CYBATHLON dashboard for registered teams: 20231129_EXO_WHL_ROB__CROWD__TABLE_LEG_CONNECTOR.stl	PRUSA
4	Cover extension, red	Wood, rod, 12 mm diameter, 500 mm length	custom made
4	Cover extension sphere, red	3D-printed from the file on the CYBATHLON dashboard for registered teams: 20231129_EXO_WHL_ROB__CROWD__EXTENSION_SPHERE.stl	PRUSA
8	Tape pattern	black-white-black	Custom made

I.8.6.2 General task set-up

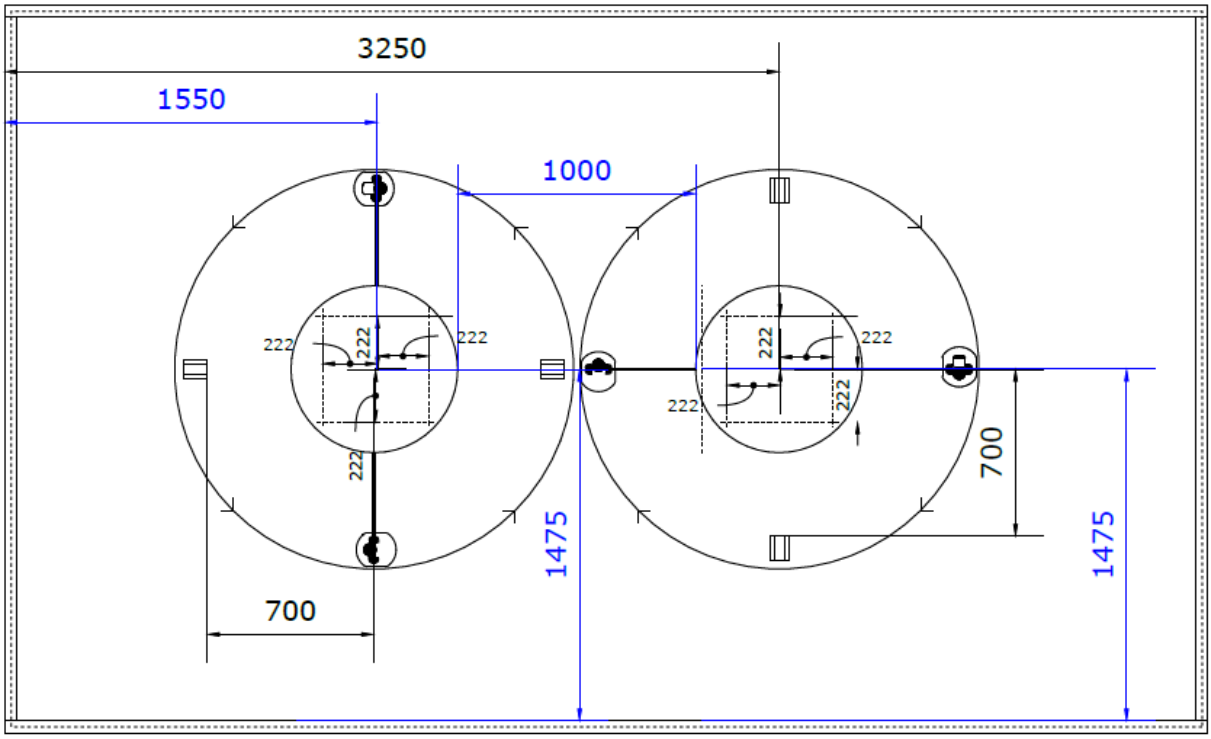

Reference mark at all four cardinal directions around each table (8 marks in total). In the figure above 4 marks are coverd by the Thymio robots.

The carpet below the robots do not have any bumbs to avoid unwanted stopping of the robots.

I.8.6.3 Infrastructure dimensions

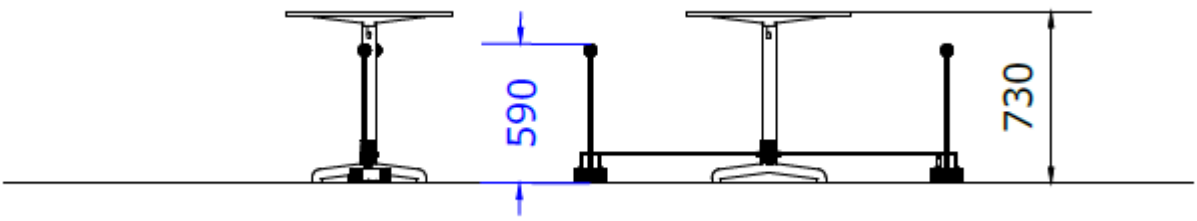

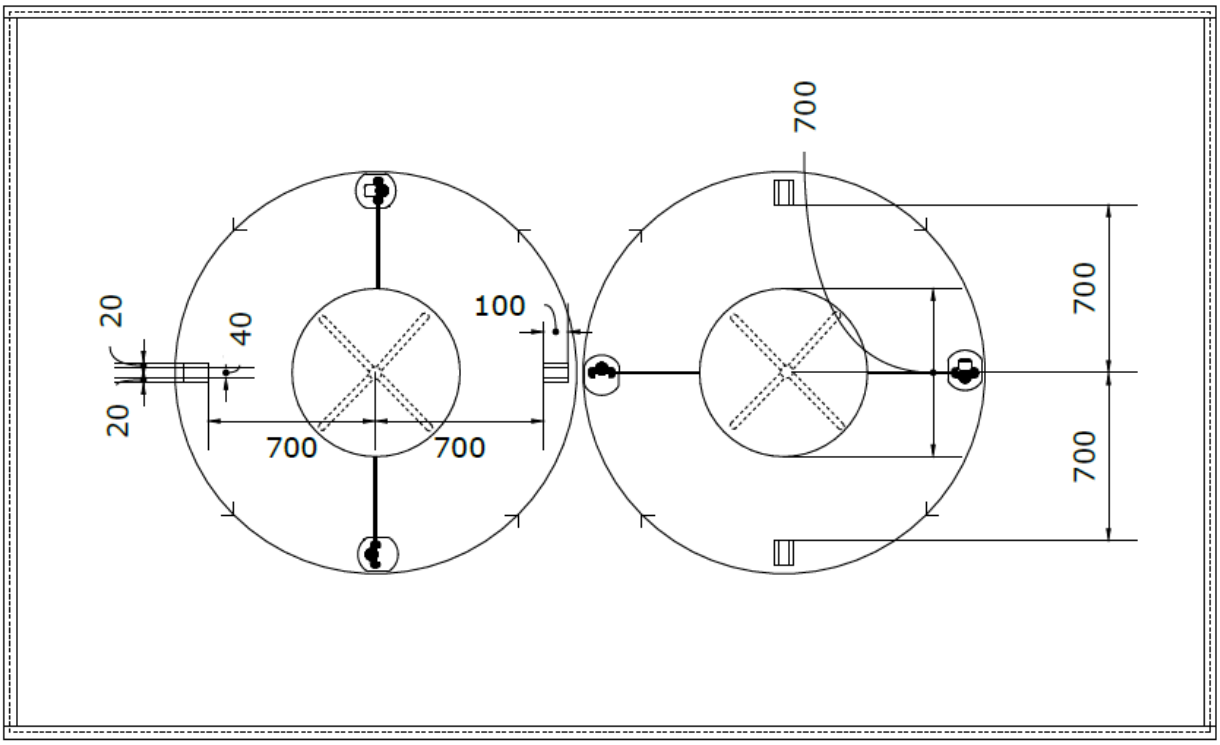

I.8.6.4 Robot bearing – assembly information

Units	Object description (all from the task material list above)
2	Robotic kit
2	Robot cover, **red**
2	Robot cover to be wheeled, **red**
4	Wheel
4	Wheel axle
8	Pipe connector, **red**
4	Aluminium pipe
2	Table leg connector, black
4	Cover extension, **red**
4	Cover extension sphere, **red**
Units	**Tools**
	Adhesive or Hot Glue
	Tape

For a visual reference, check out 20231129_EXO_WHL_ROB__CROWD__ASSEMBLY.step *or pictures below*

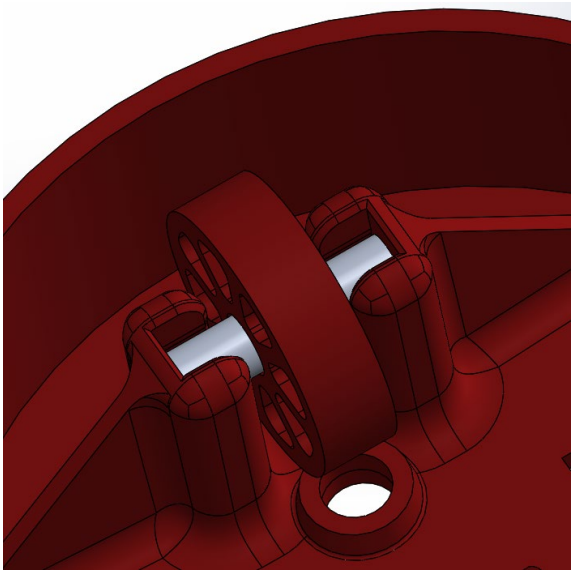

Popped in *wheel axle* with *wheel*

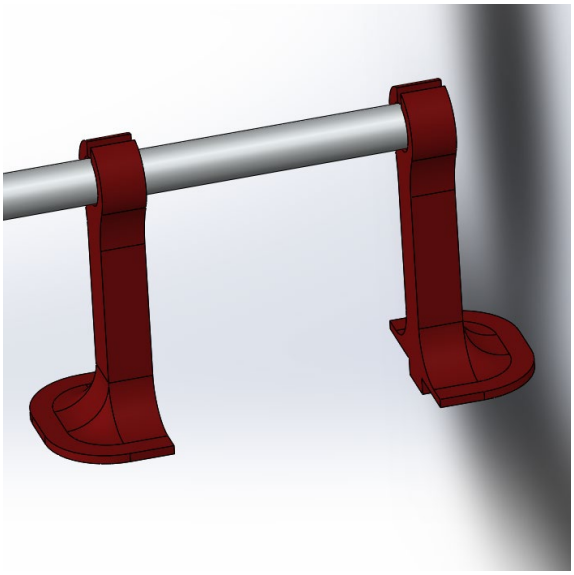

Pipe connector with the *aluminium pipe*

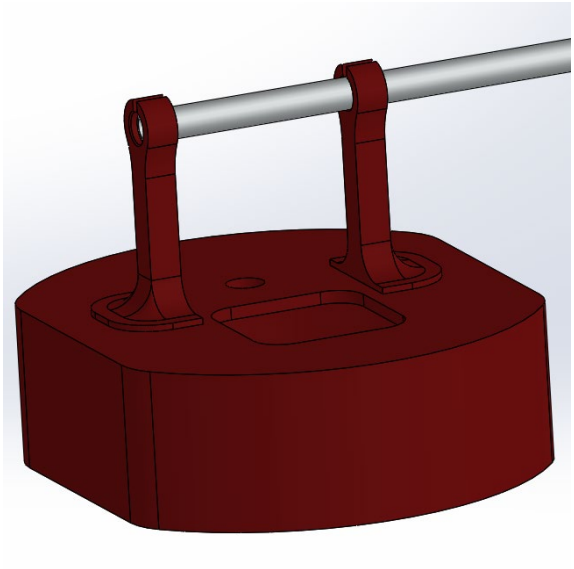

Pipe connector on *robot cover*

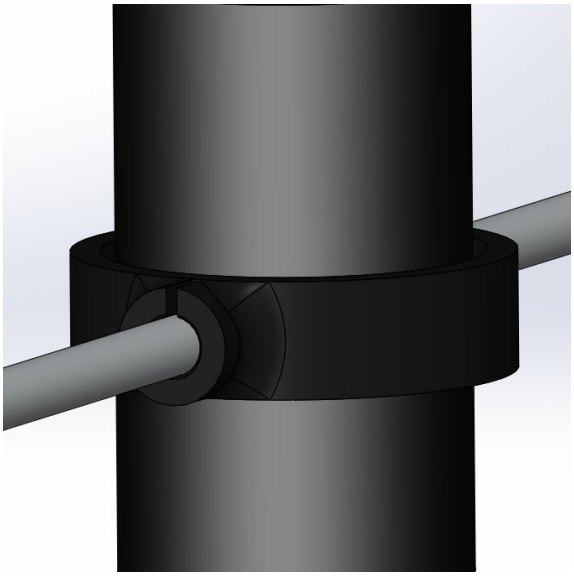

Aluminium pipe connected to *table leg connector*

12) Mark the spots where the *Stensele* tables must be on the task floor.
13) Around each table, use the tape pattern to make the four marks as indicated in the drawing above.
14) Unscrew the feet of the *Stensele* bar table. Put the *table leg connector* on the middle of table leg. Re-screw the feet back on the *Stensele* and put it on the spot for the task.

15) Put the *wheel* in the middle of the axle. Use a little force to plug the *wheel axle* into the axle mounting of the *robot cover to be wheeled*. Repeat for all wheels. (see figures below)
16) Push the *aluminium pipe* into two *pipe connectors*.
17) Put the *pipe connector* in the square holes of the *robot covers*. The feet should look outwards. Use an adhesive between feet and the covers.
18) Put one *robot cover* and one *robot cover to be wheeled* on opposite positions right in front of the mark (as indicated in the drawing above).
19) Connect the *aluminium pipe* with the *table leg connector*.
20) Plug in the Thymio robot under the *robot cover*.
21) Put the *cover extension* in the holes of the covers. Use the tape to increase friction if the poles slide through too easily.
22) Put the *cover extension sphere* on the poles.

I.8.7 Winding Stairs

I.8.7.1 Task infrastructure

Units	Object description	Details / Model	Source
1	Stairs	wood, optionally with recessed checker plate edge protection on each step, CYBATHLON uses multi-layer solid wood	custom made

I.8.7.2 General task set-up

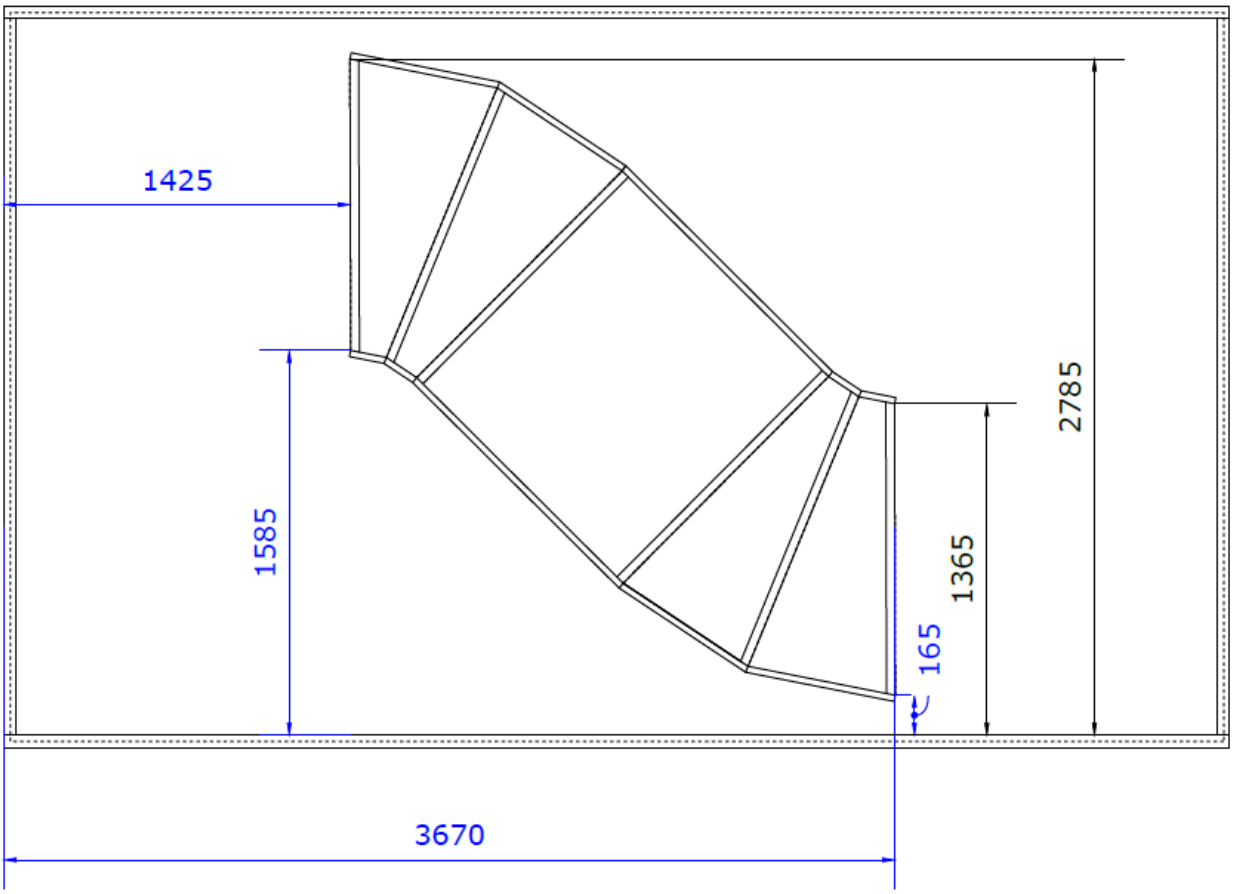

I.8.7.3 Infrastructure dimensions

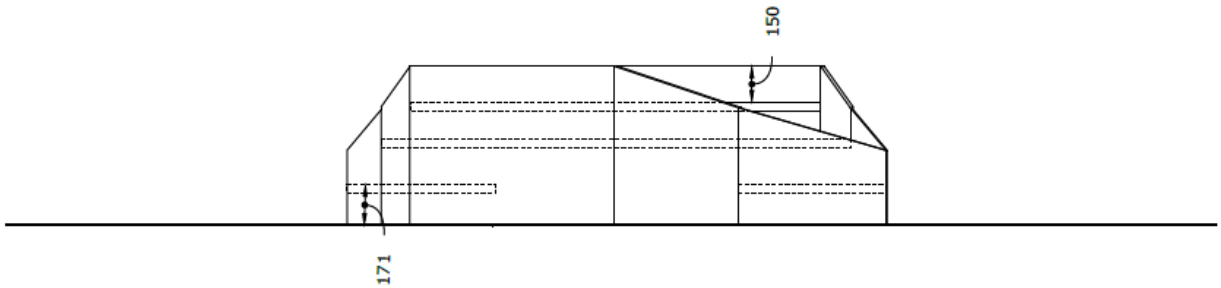

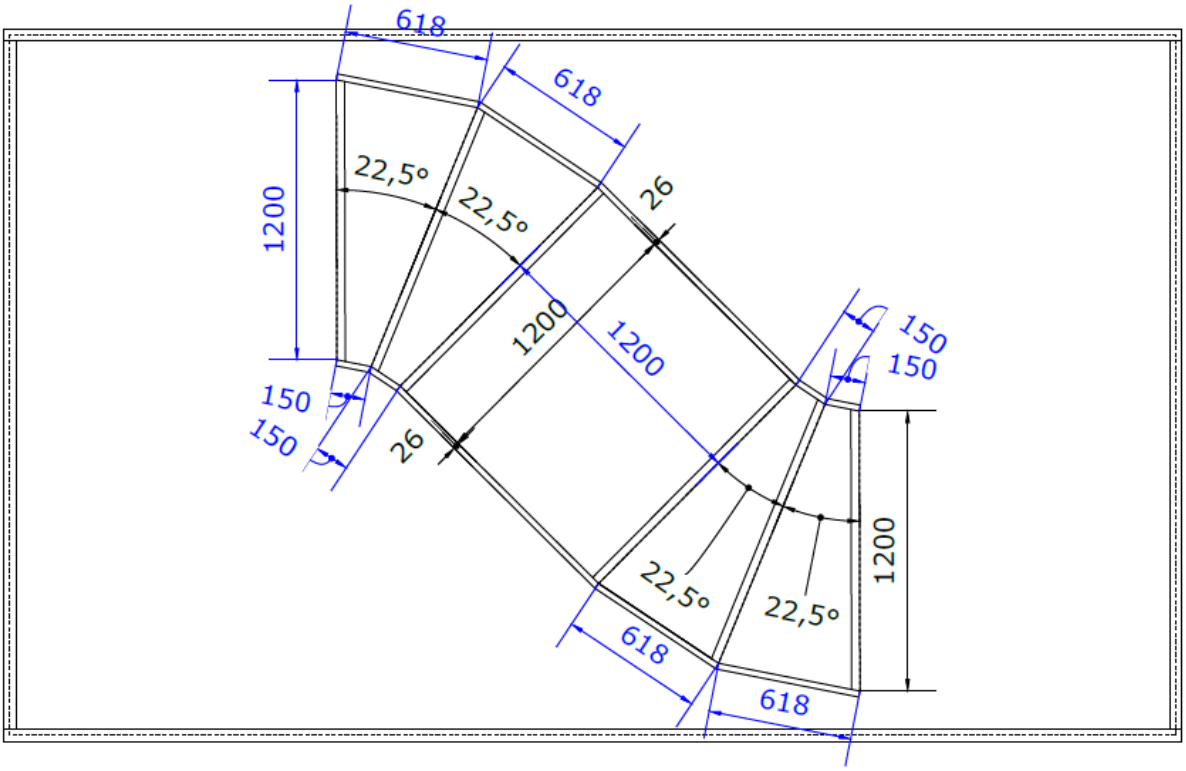

I.8.8 Door

I.8.8.1 Task infrastructure

Units	Object description	Details / Model	Source	Provided by CYBATHLON
1	Doorframe rack	wood, CYBATHLON uses MDF	custom made	
1	Doorframe	Pertura CPL white	Hornbach	
1	Door left	Pertura Yori CPL white, left	Hornbach	
1	Door handle	Pertura BB Vitur alu F1	Hornbach	To local hubs only
1	Door knob		Hornbach	To local hubs only

I.8.8.2 General task set-up

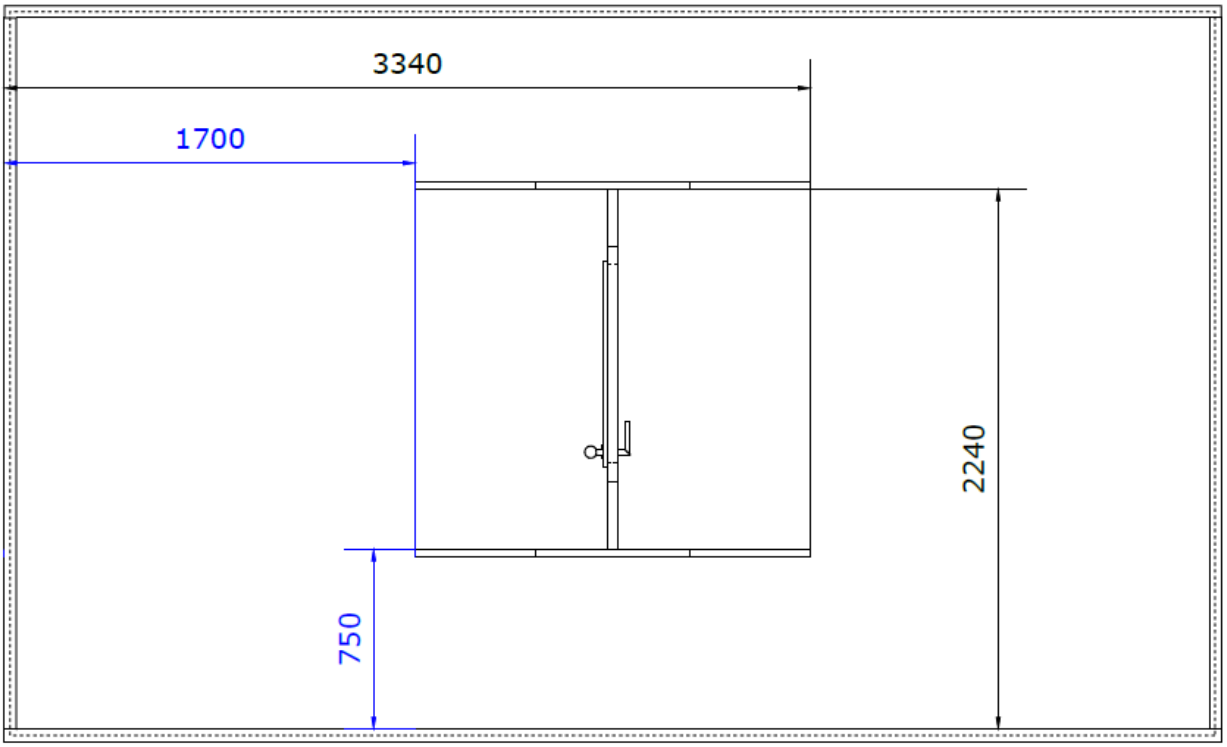

I.8.8.3 Infrastructure dimensions

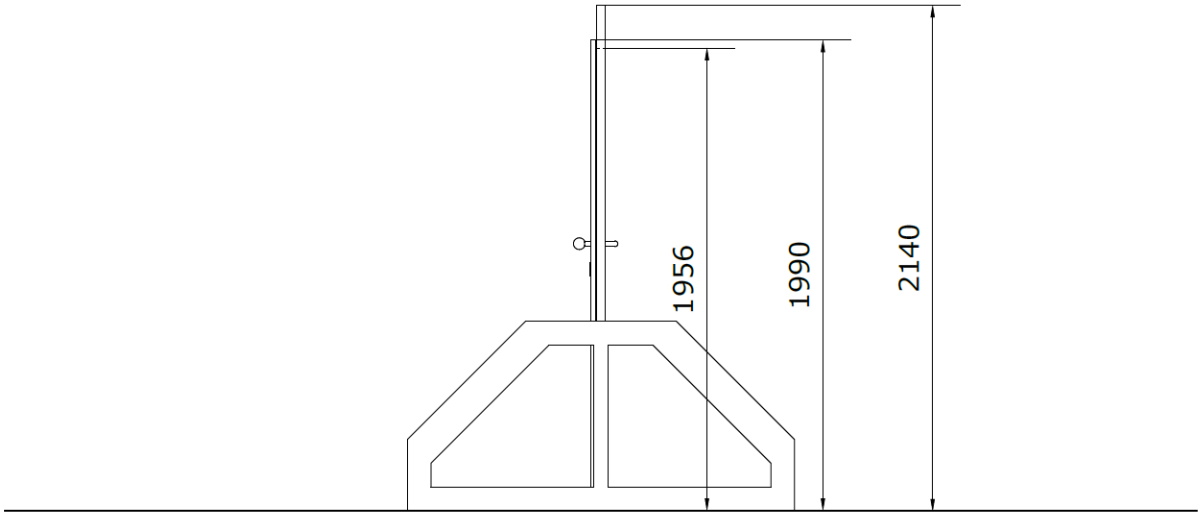

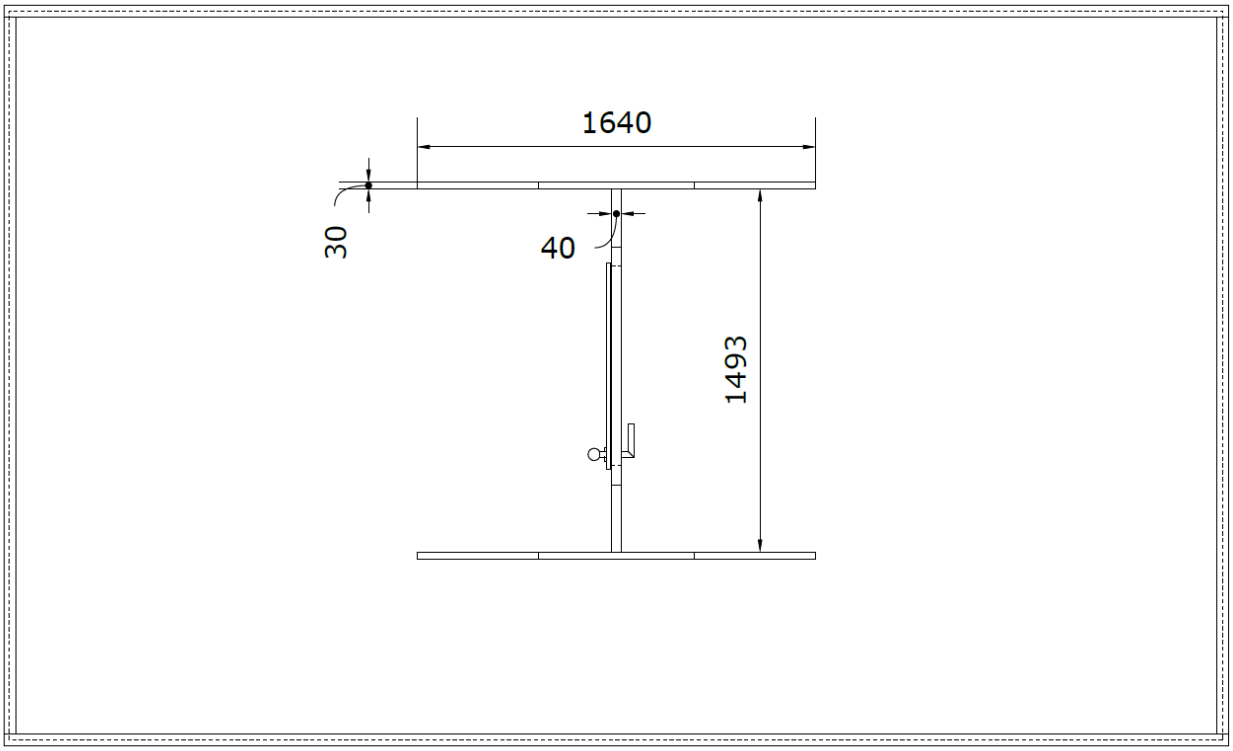

I.8.8.4 Door - assembly information

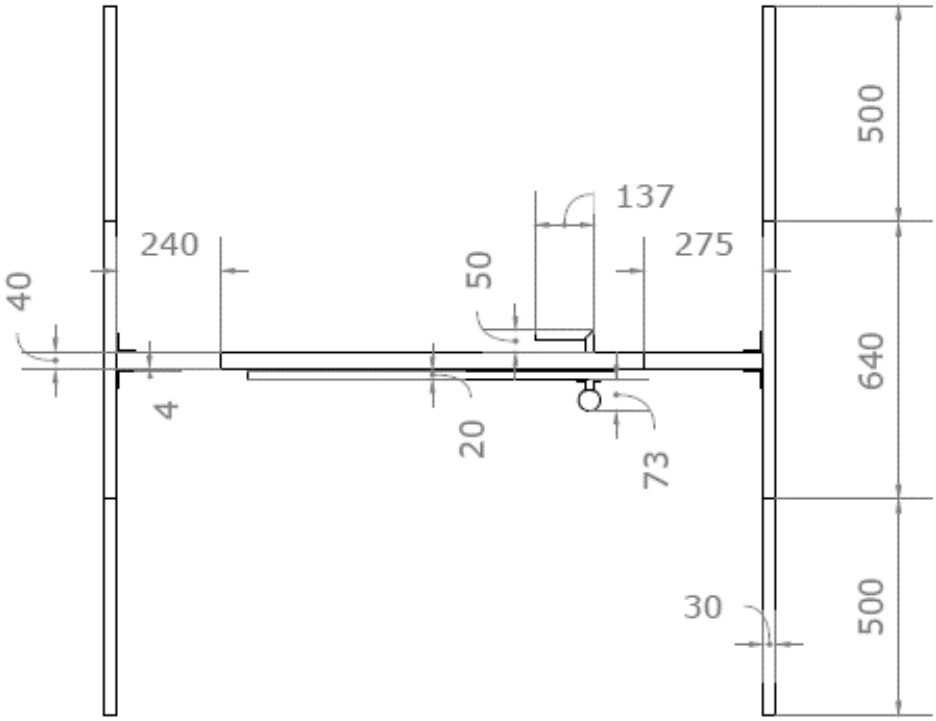

I.8.9 Rocky Terrain

I.8.9.1 Task infrastructure

Units	Object description	Details / Model	Source
4	Base plate, with lateral inforcment bar with red top surface	wood, with fixtures for attachment	custom made
2	Wooden markers, with green top surface	wood	Custom made
16	Half cylinder bar (long, for placement across to race direction)	wood, top surfaces with increased friction and painted grey, l: 400 mm	custom made
12	Half cylinder bar (long, for angulated placement)	wood, top surfaces with increased friction and painted grey, l: 400 mm	custom made
12	Half cylinder bar (short, along race direction)	wood, top surfaces with increased friction and painted grey, l: 250 mm	custom made

I.8.9.2 General task set-up

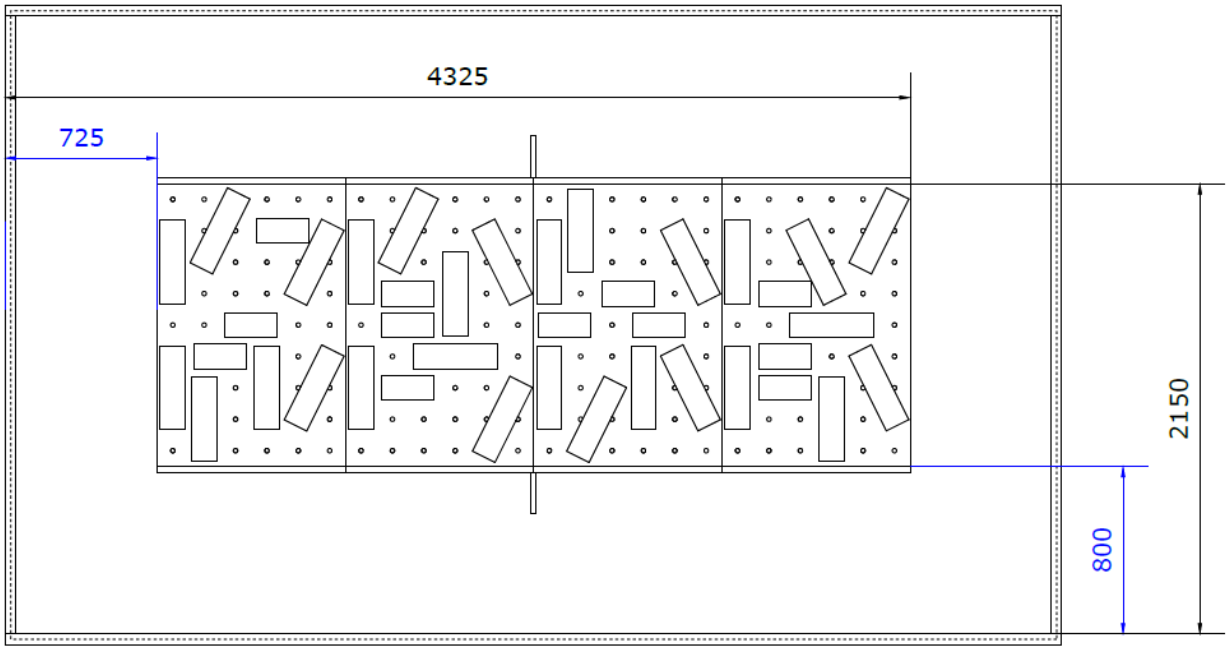

I.8.9.3 Infrastructure dimensions

Change log: height of bars reduced

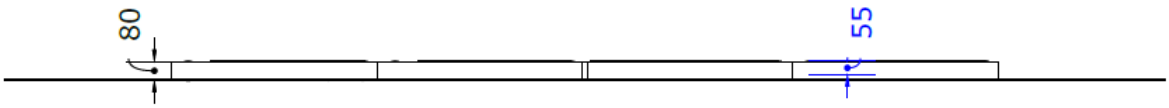

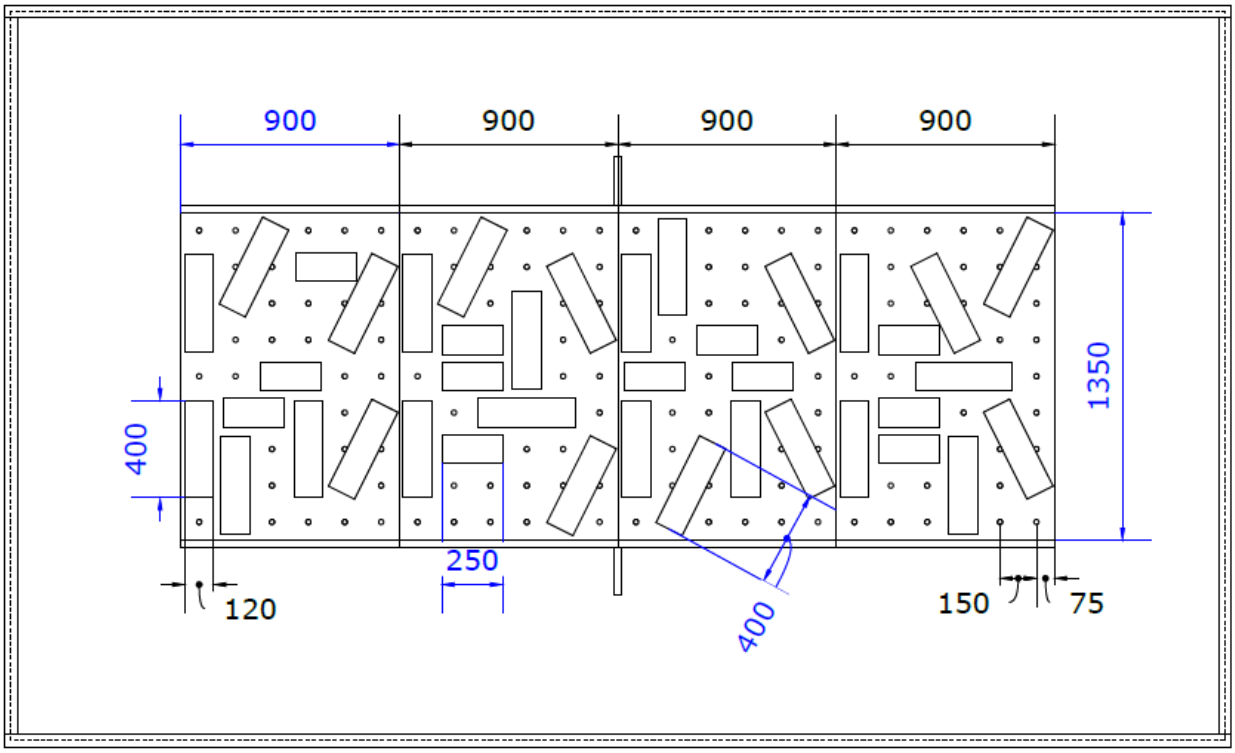
900
900
900
900
1350
400
250
120
400
150
75

I.8.10 Doorstep

I.8.10.1 Task infrastructure

Units	Object description	Details / Model	Source
1	Doorstep obstacle	Wood, with aluminium cover on top, and friction layer underneath (to be specified in more detail)	custom made

I.8.10.2 General task set-up

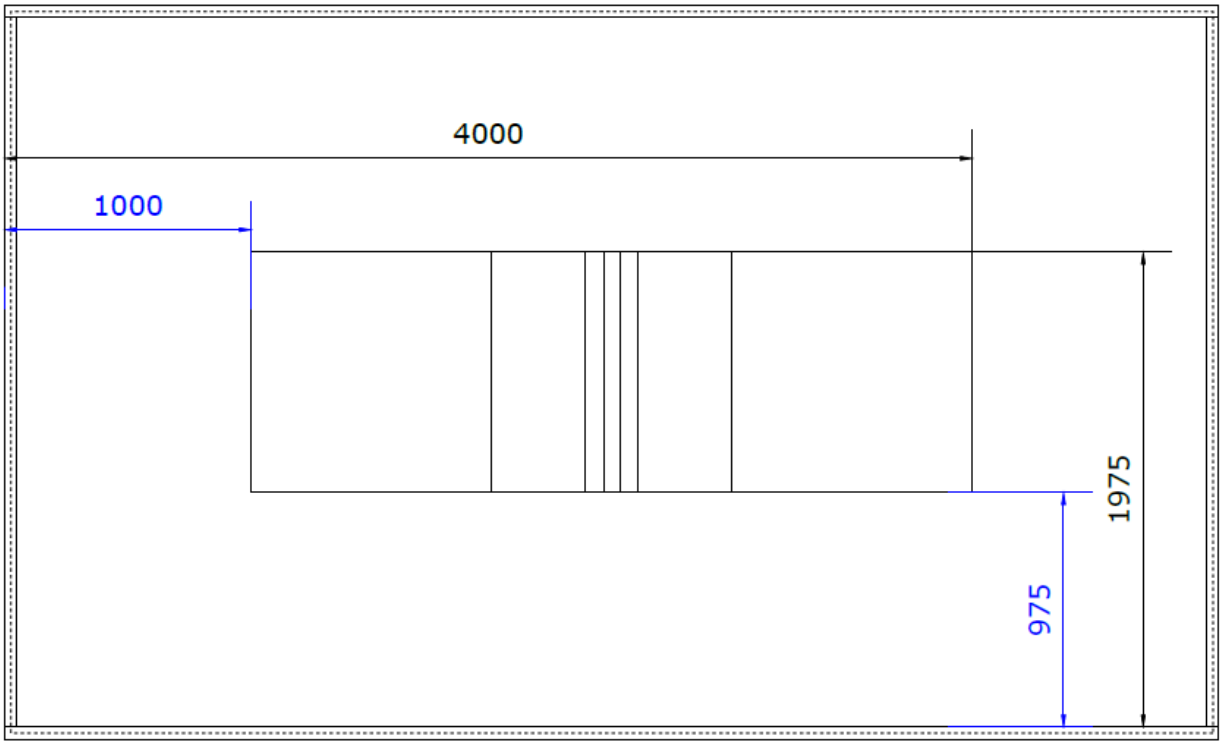

I.8.10.3 Infrastructure dimensions

Change log: thickness of threshold increased

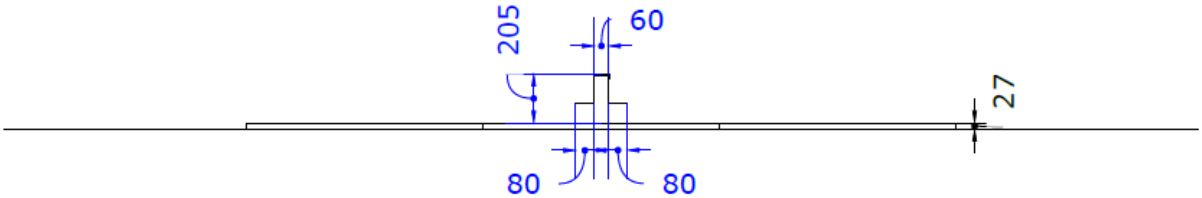
205
60
27
80
80

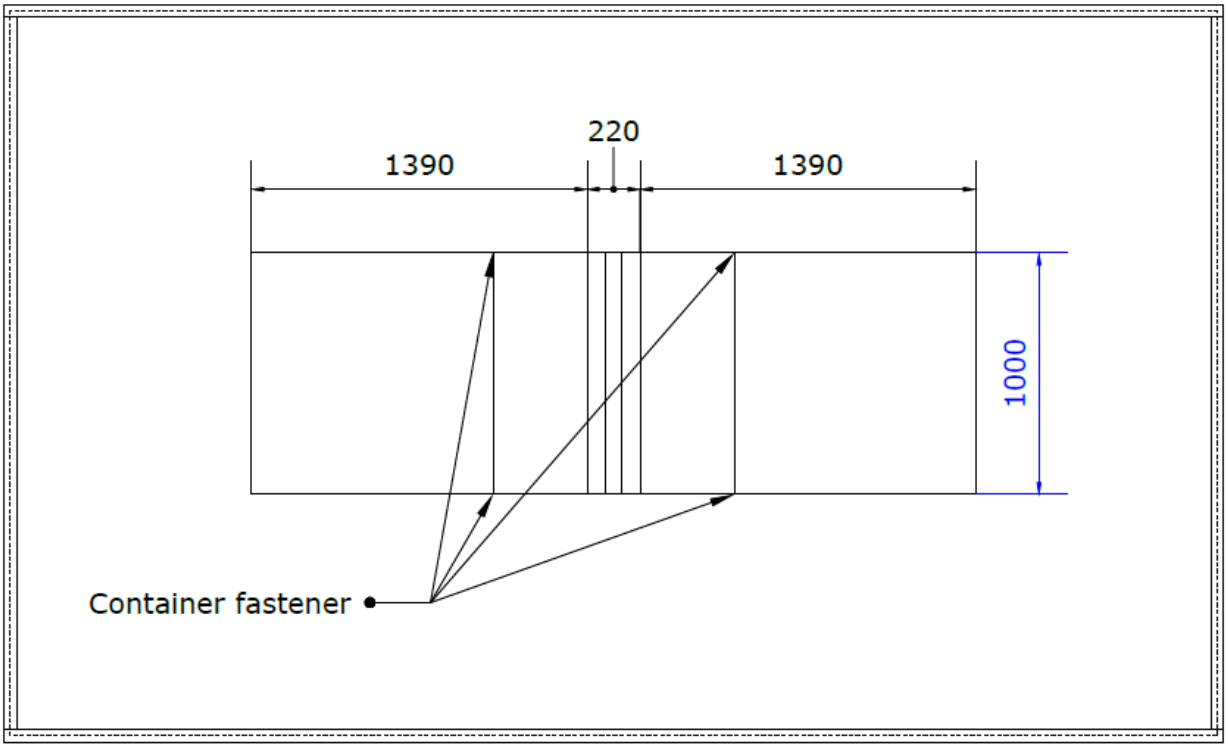
220
1390
1390
1000
Container fastener

I.9 ROB

I.9.1 Mailbox

I.9.1.1 Task infrastructure

Units	Object description	Details / Model	Source
1	Mailbox		BURG WÄCHTER
1	Mailbox pole	steel	BURG WÄCHTER
1	Mailbox base	wood, black, use an anti-slip underlay to increase friction below the hexagons	custom made
1	Box	100x100x150	AliExpress
1	Box filling	3D-printed from the file on the CYBATHLON dashboard for registered teams: 20221130_ROB__MAILBOX__BOX_FILLING.stl 20221130_ROB__MAILBOX__BOX_FILLING_TOP.stl	PRUSA
1	Side table	Lack (black or black brown)	IKEA

I.9.1.2 General task set-up

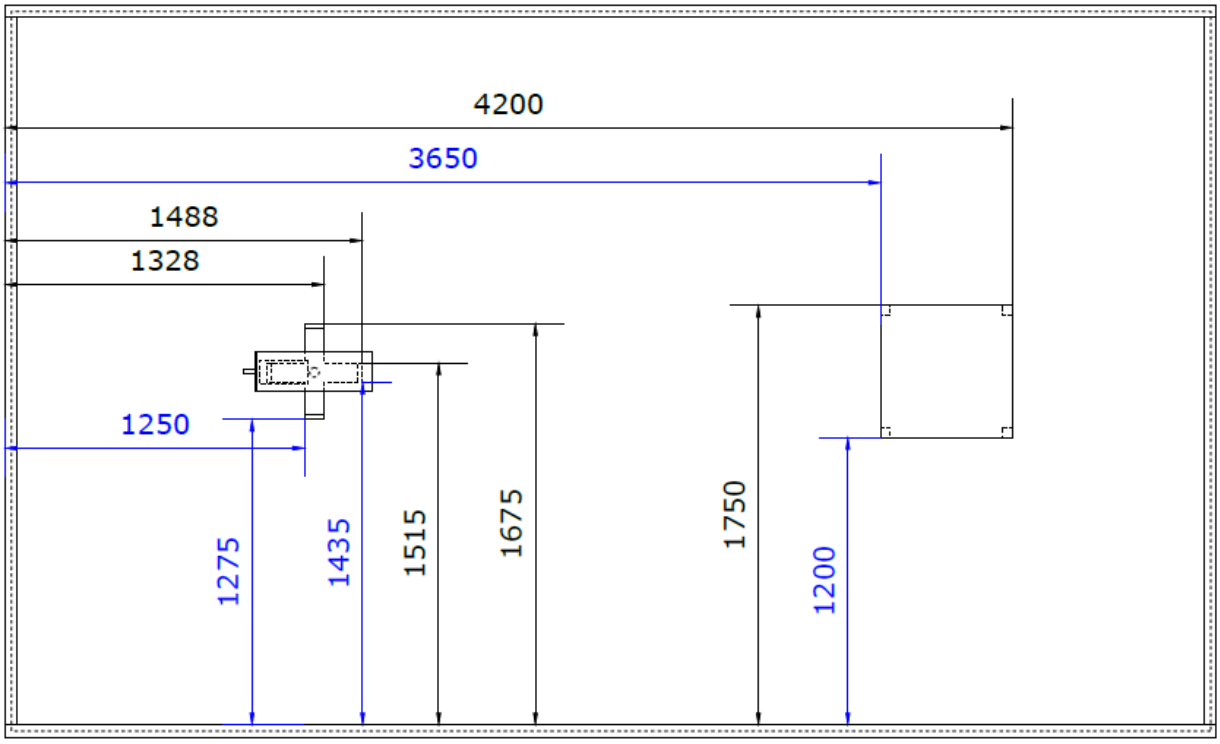

I.9.1.3 Infrastructure dimensions

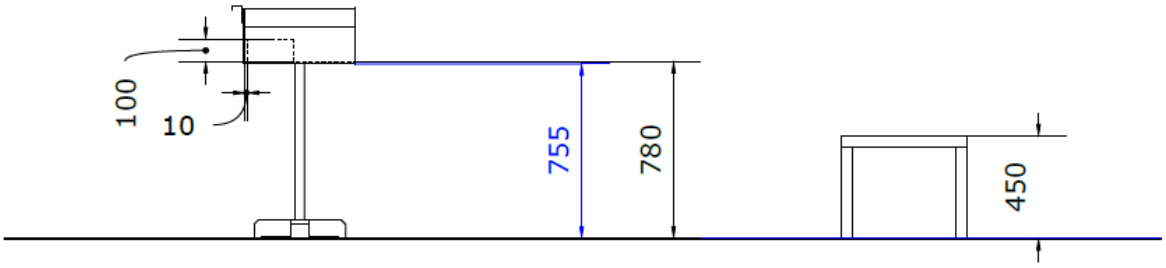

755mm is the hight of the lowest edge on the outside of the mailbox.

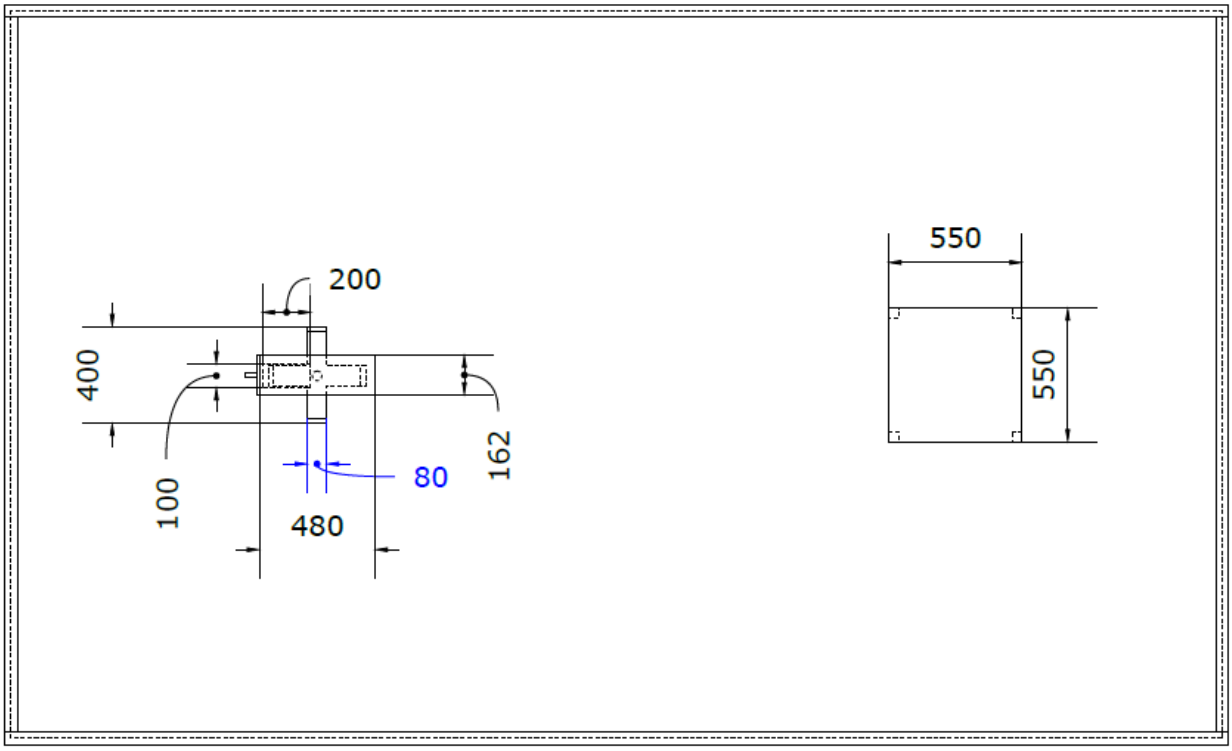

I.9.2 Toothbrush

I.9.2.1 Task infrastructure

Units	Object description	Details / Model	Source	Provided by CYBATHLON
1	Table	Sandsberg	IKEA	
1	Mirror	Lilltjärn	IKEA	
1	Mirror feet	Wood, anti slip knobs can be below	custom made	
1	Plastic cup	white, Kalas	IKEA	
1	Toothbrush	Pro – Extra Soft	Oral-B	To local hubs only

I.9.2.2 General task set-up

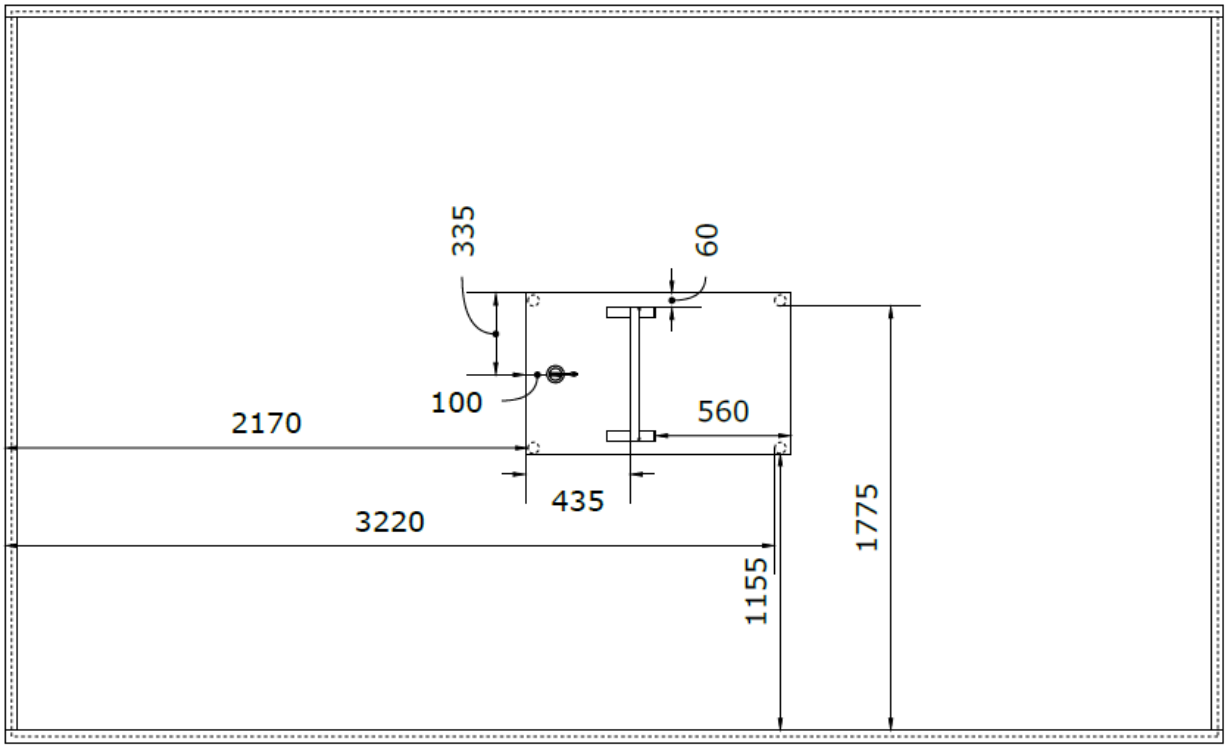

I.9.2.3 Infrastructure dimensions

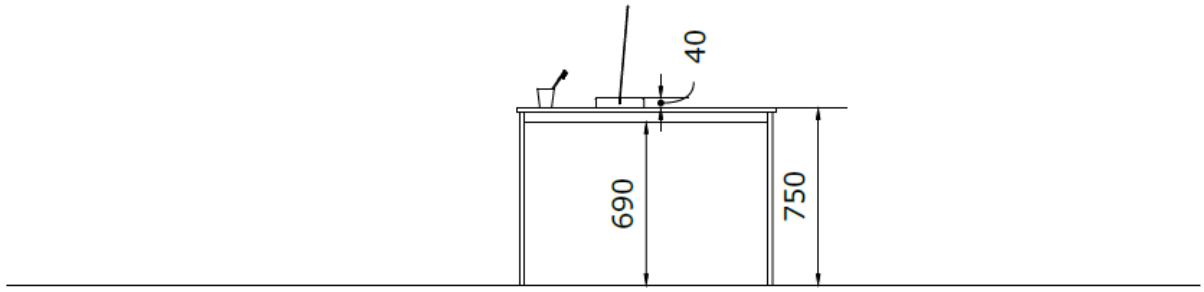

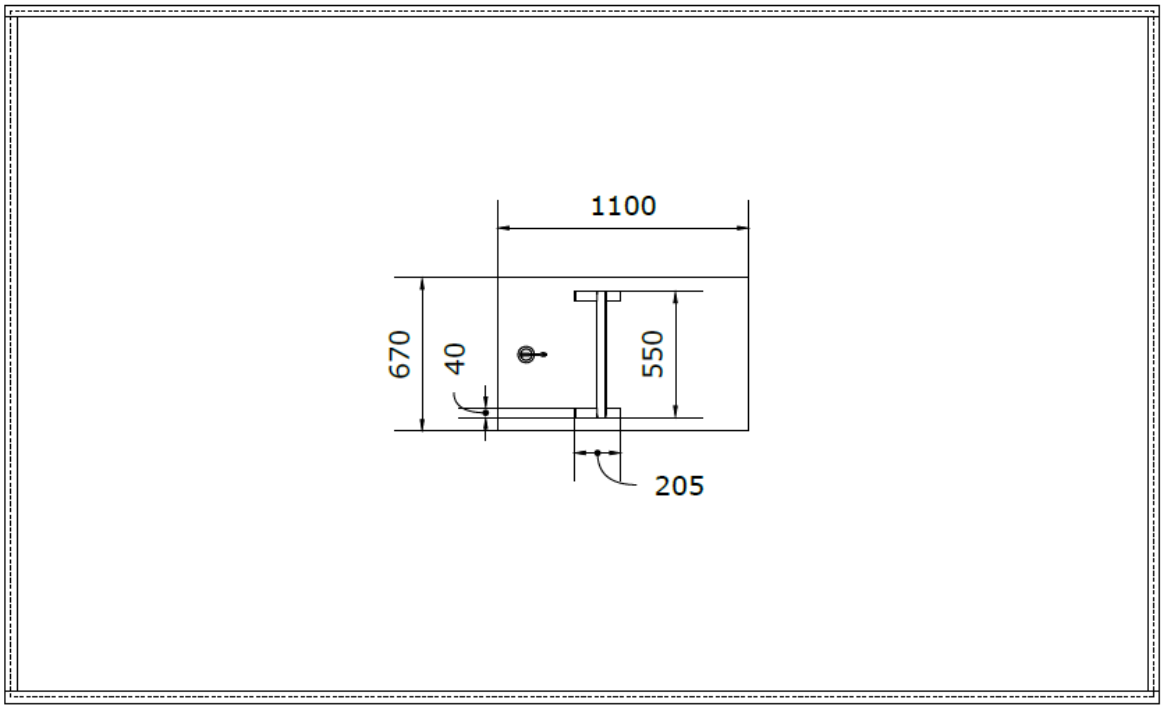

I.9.3 Pick-up

I.9.3.1 Task infrastructure

Units	Object description	Details / Model	Source
2	Table	Sandsberg	IKEA
1	PET bottle, white transparent (1.5l), filled with water	empty weight (with cap): 41g, filled with 1.5l water: 1541g, weight tolerance: +/- 50g	bottleshop
1	Bottle cap	Water closure white, Code: 12820011M1	bottleshop

I.9.3.2 General task set-up

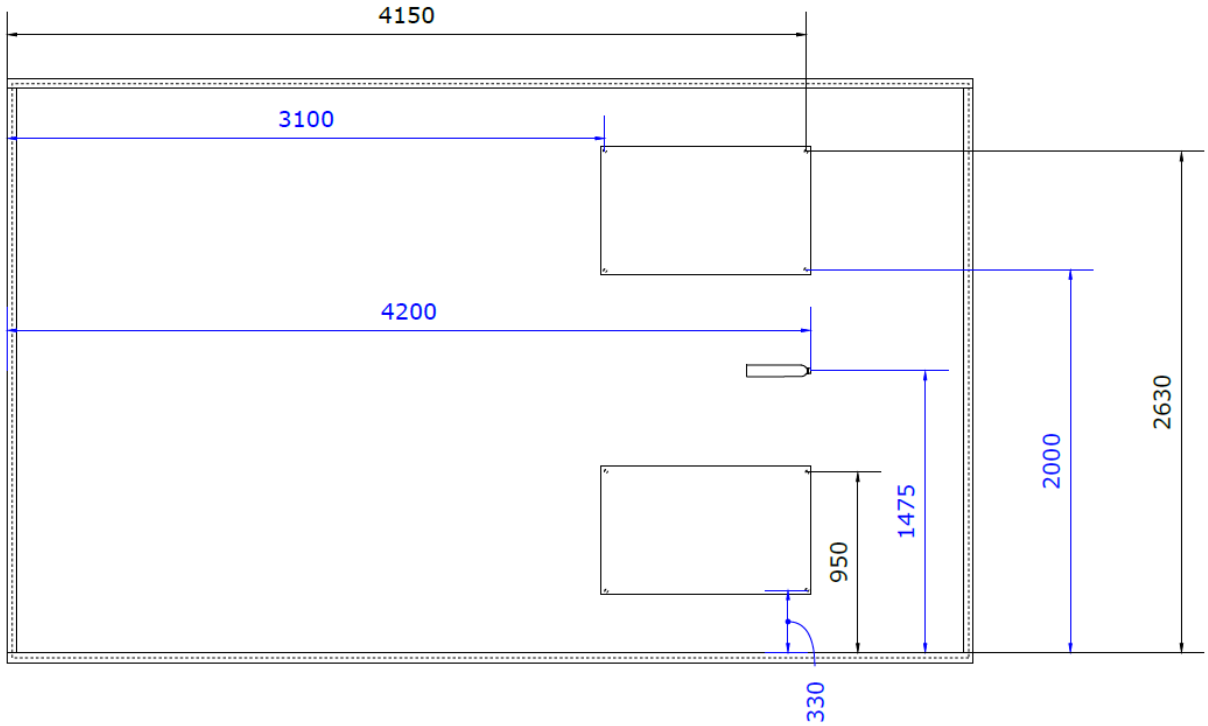

I.9.3.3 Infrastructure dimensions

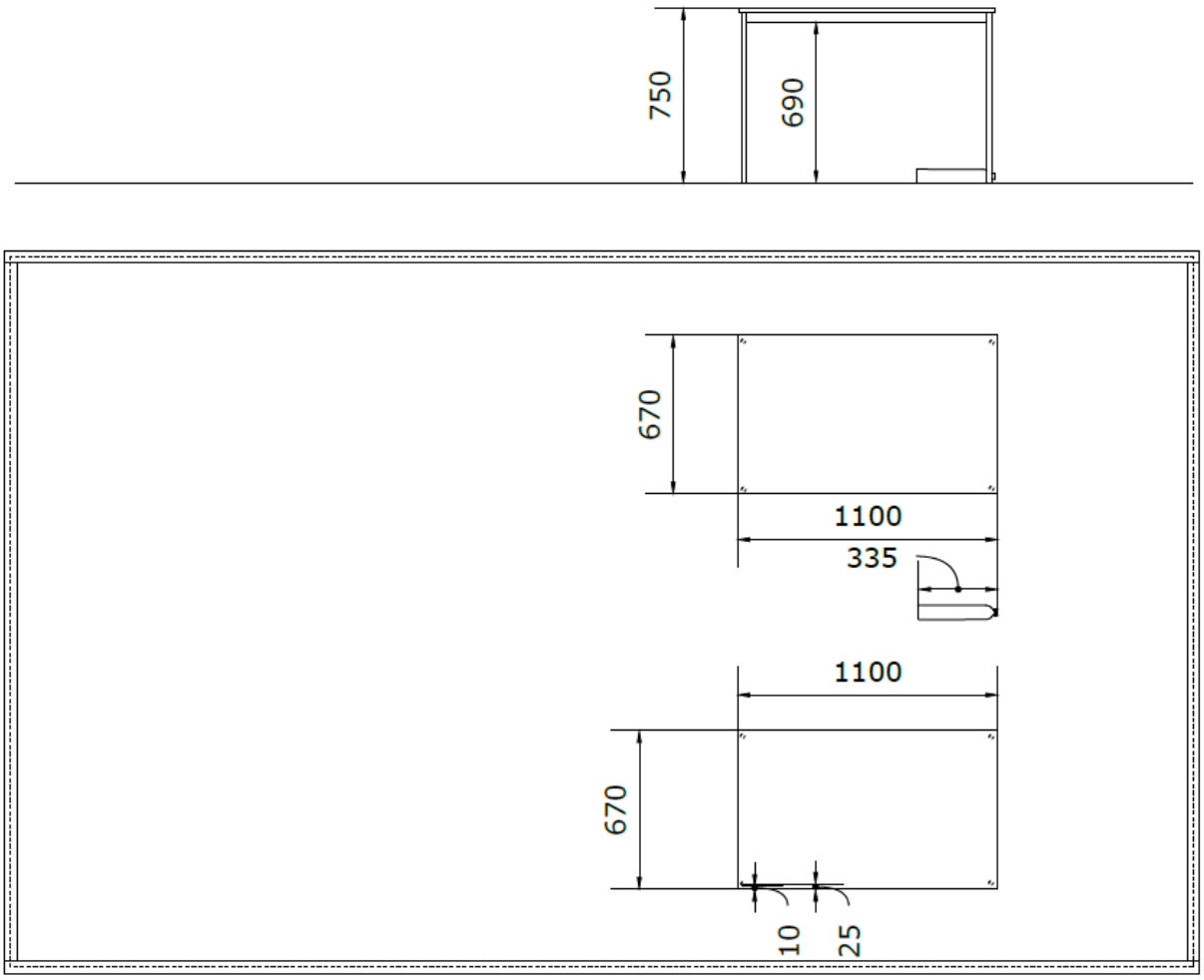

I.9.4 Scarf

I.9.4.1 Task infrastructure

Units	Object description	Details / Model	Source	Provided by CYBATHLON
1	Chair	Adde	IKEA	
1	Clothes rack	Rigga, with removed wheels	IKEA	
1	Scarf	1050mm x 170mm	Wildemasche	To local hubs only

I.9.4.1.1 Picture of scarf

I.9.4.2 General task set-up

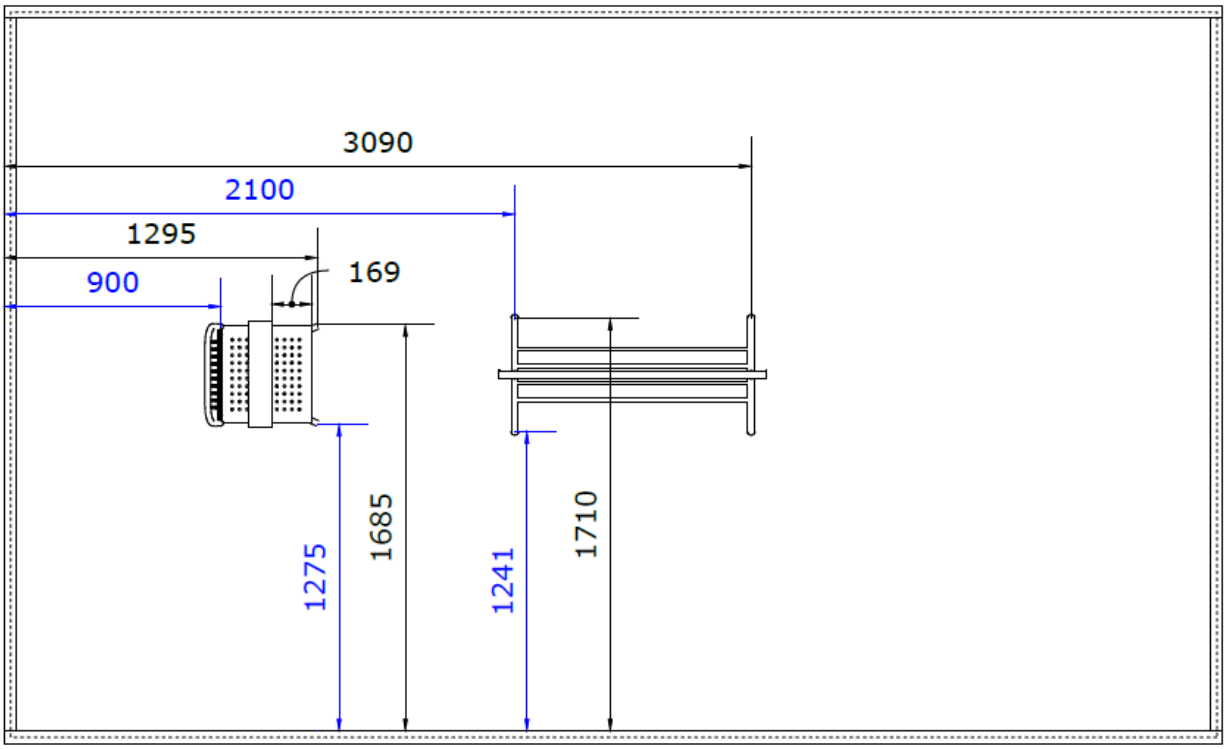

I.9.4.3 Infrastructure dimensions

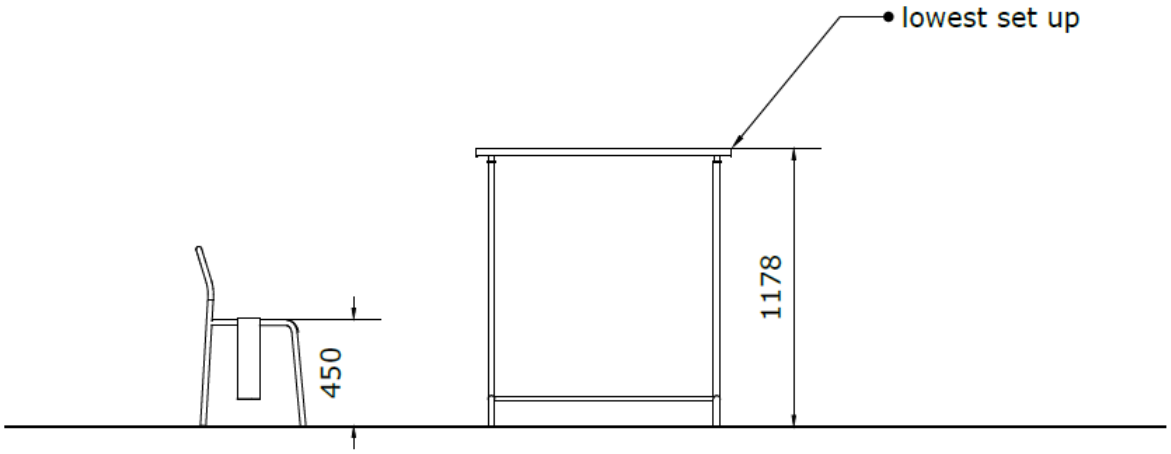

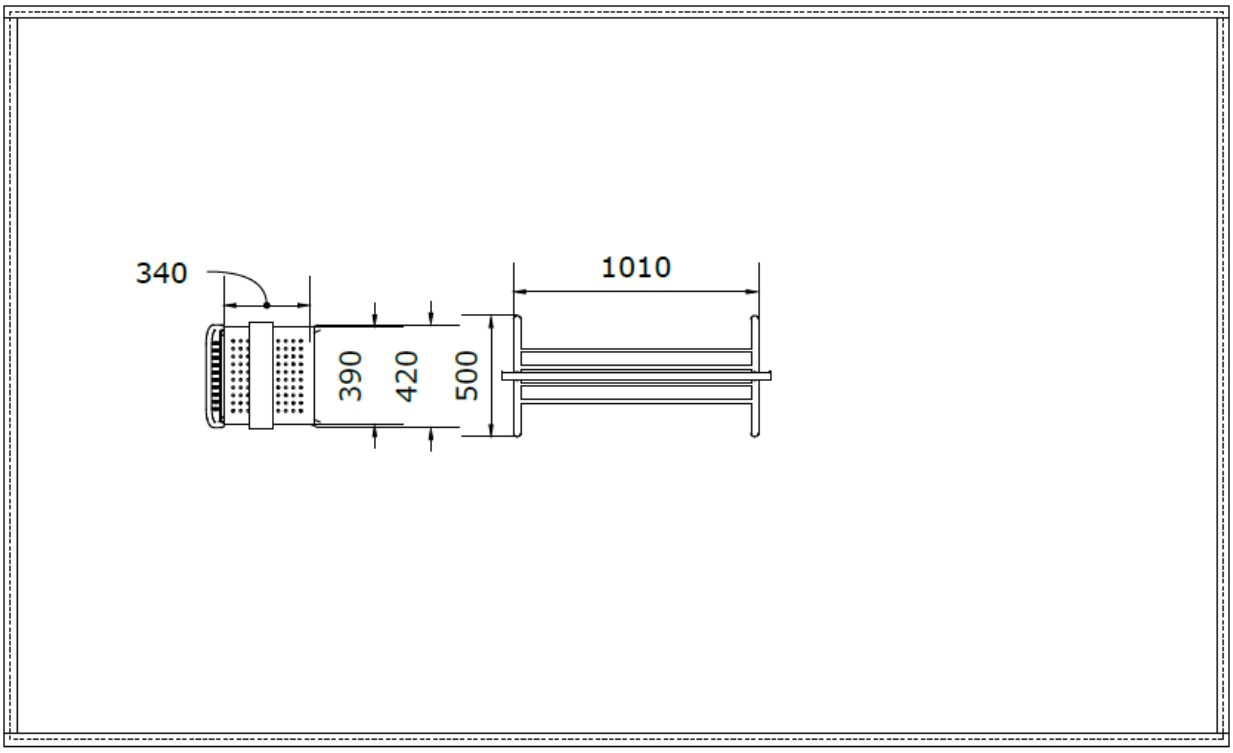

I.9.5 Eating

I.9.5.1 Task infrastructure

Units	Object description	Details / Model	Source	Provided by CYBATHLON
1	Coffee table	Vittsjö, 35x55x65cm	IKEA	
1	Plate	365+, 20cm	IKEA	
1	Apple, green		GMMH	To local hubs only

I.9.5.2 General task set-up

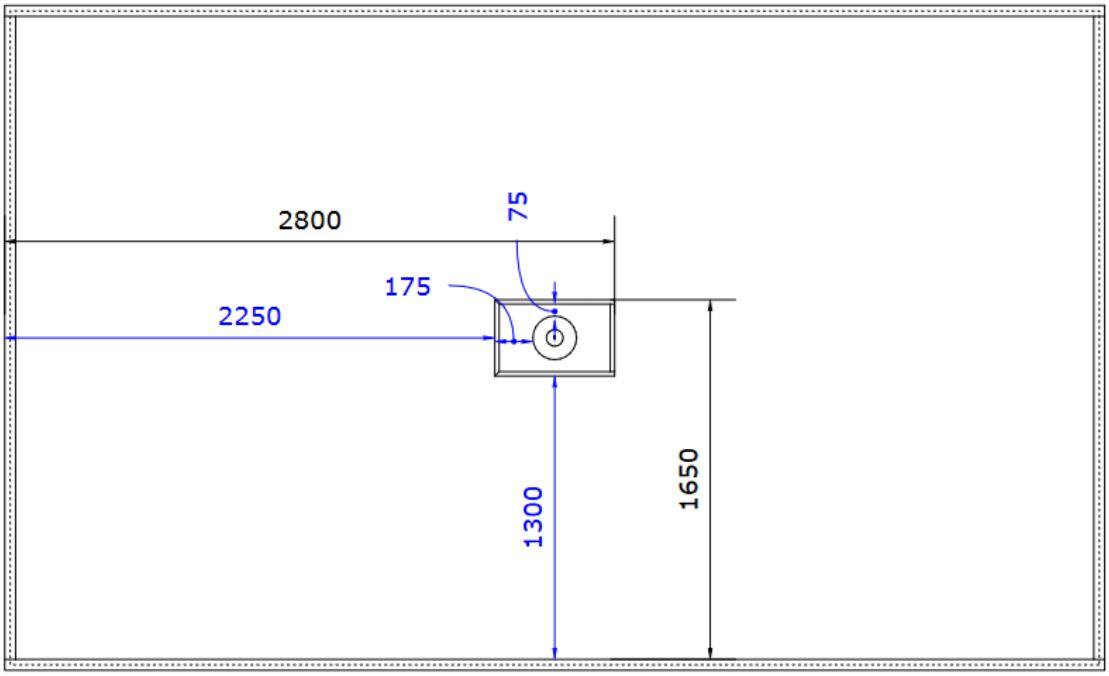

I.9.5.3 Infrastructure dimensions

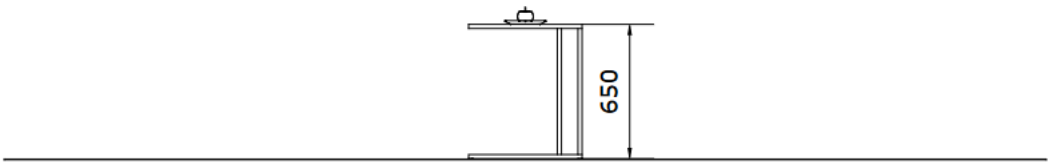

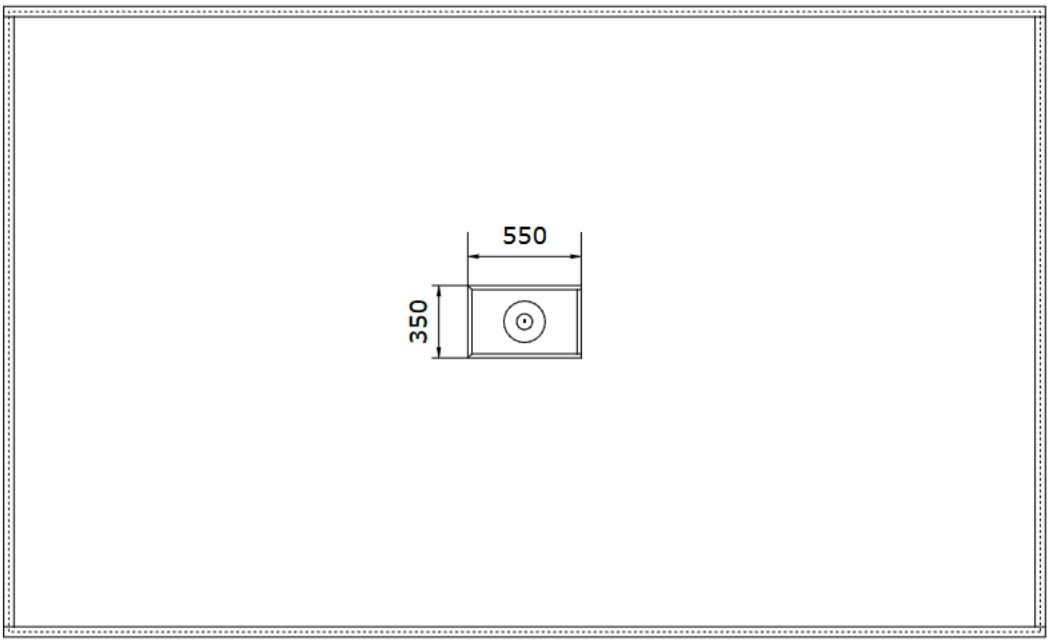
550
350

I.9.6 Crowd

I.9.6.1 Task infrastructure

Units	Object description	Details / Model	Source
2	Table	Stensele, 70cm diameter, 75cm height	IKEA
2	Robotic kit	Thymio is the robotic kit selected for the competition and must be used at all local hubs. Please reach out directly to the Thymio team (sales@mobsya.org) and mention that you are part of the competition to enjoy a 22% price reduction. Transportation costs and customs fees will be borne by the ordering institution. The program to be loaded on to the Thymios can be downloaded from the dashboard for registered teams: 20231220_EXO_WHL_ROB__CROWD__Thymio-Program.aesl	Thymio
2	Robot cover, red	3D-printed from the file on the CYBATHLON dashboard for registered teams: 20231129_EXO_WHL_ROB__CROWD__ROBOT_COVER.stl	PRUSA
2	Robot cover to be wheeled, red	3D-printed from the file on the CYBATHLON dashboard for registered teams: 20231129_EXO_WHL_ROB__CROWD__ROBOT_COVER_WHEEL.stl	PRUSA
4	Wheel	3D-printed from the file on the CYBATHLON dashboard for registered teams: 20231129_EXO_WHL_ROB__CROWD__WHEEL.stl	PRUSA (any color)
4	Wheel axle	Aluminium, 10 mm diameter, 38 mm length, 1 mm thickness	custom made
8	Pipe connector, red	3D-printed from the file on the CYBATHLON dashboard for registered teams: 20231129_EXO_WHL_ROB__CROWD__PIPE_CONNECTOR.stl	PRUSA
4	Aluminium pipe, red	Aluminium, 10 mm diameter, 750 mm length, 1 mm thickness, connecting connector cover and table leg, to be coloured by hub	custom made
2	Table leg connector, black	3D-printed from the file on the CYBATHLON dashboard for registered teams: 20231129_EXO_WHL_ROB__CROWD__TABLE_LEG_CONNECTOR.stl	PRUSA
4	Cover extension, red	Wood, rod, 12 mm diameter, 500 mm length	custom made
4	Cover extension sphere, red	3D-printed from the file on the CYBATHLON dashboard for registered teams: 20231129_EXO_WHL_ROB__CROWD__EXTENSION_SPHERE.stl	PRUSA
8	Tape pattern	black-white-black	Custom made

I.9.6.2 General task set-up

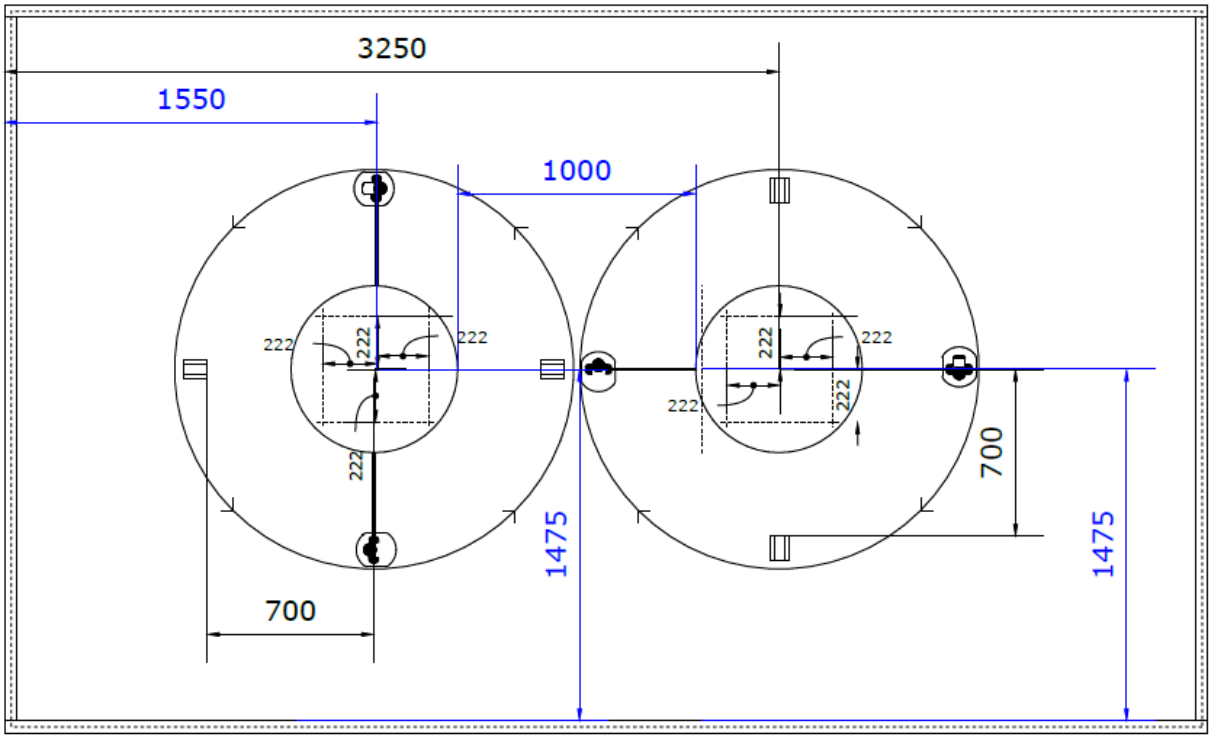

Reference mark at all four cardinal directions around each table (8 marks in total). In the figure above 4 marks are coverd by the Thymio robots.

The carpet below the robots do not have any bumbs to avoid unwanted stopping of the robots.

I.9.6.3 Infrastructure dimensions

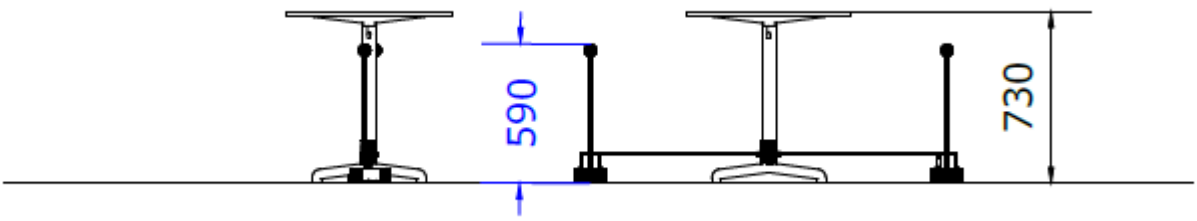

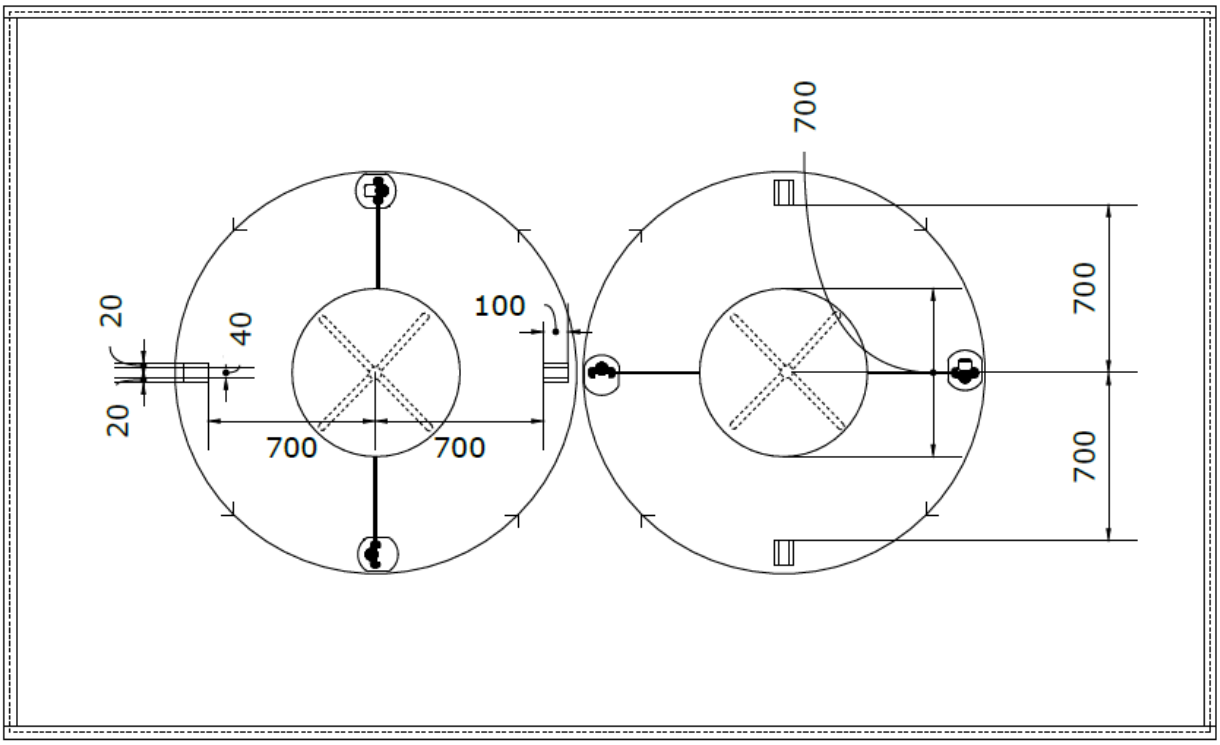

I.9.6.4 Robot bearing – assembly information

Units	Object description (all from the task material list above)
2	Robotic kit
2	Robot cover, **red**
2	Robot cover to be wheeled, **red**
4	Wheel
4	Wheel axle
8	Pipe connector, **red**
4	Aluminium pipe
2	Table leg connector, black
4	Cover extension, **red**
4	Cover extension sphere, **red**
Units	**Tools**
	Adhesive or Hot Glue
	Tape

For a visual reference, check out 20231129_EXO_WHL_ROB__CROWD__ASSEMBLY.step *or pictures below*

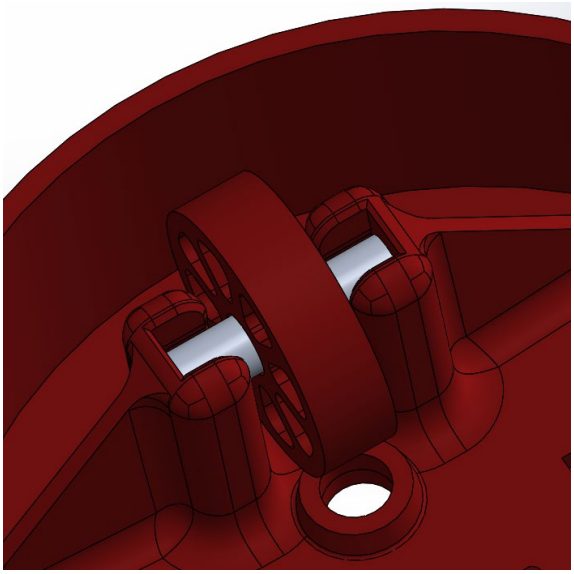

Popped in *wheel axle* with *wheel*

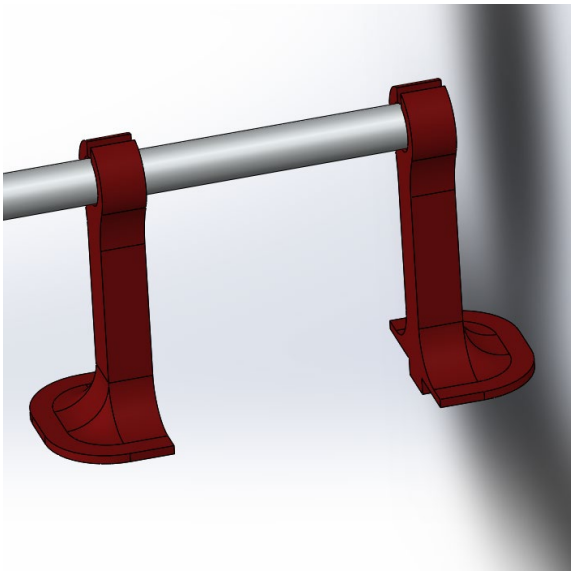

Pipe connector with the *aluminium pipe*

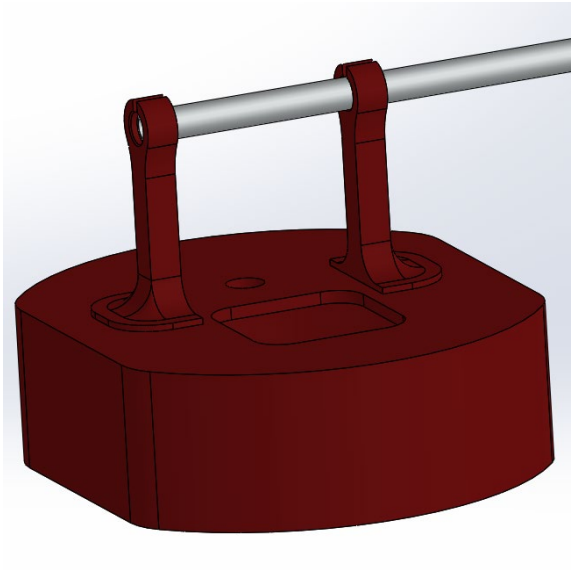

Pipe connector on *robot cover*

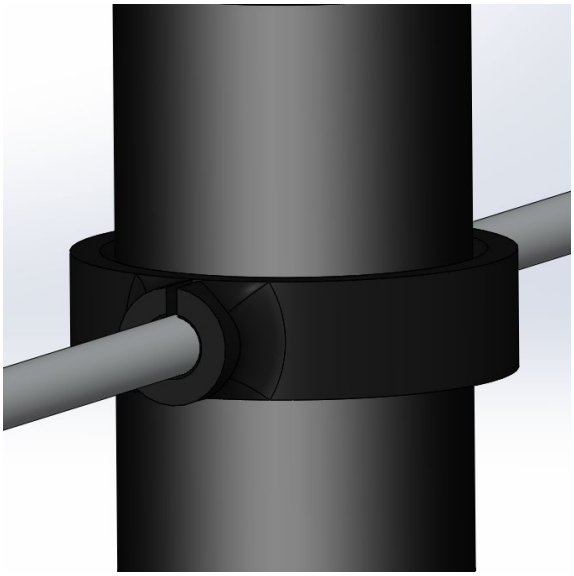

Aluminium pipe connected to *table leg connector*

23) Mark the spots where the *Stensele* tables must be on the task floor.
24) Around each table, use the tape pattern to make the four marks as indicated in the drawing above.
25) Unscrew the feet of the *Stensele* bar table. Put the *table leg connector* on the middle of table leg. Re-screw the feet back on the *Stensele* and put it on the spot for the task.

26) Put the *wheel* in the middle of the axle. Use a little force to plug the *wheel axle* into the axle mounting of the *robot cover to be wheeled*. Repeat for all wheels. (see figures below)
27) Push the *aluminium pipe* into two *pipe connectors*.
28) Put the *pipe connector* in the square holes of the *robot covers*. The feet should look outwards. Use an adhesive between feet and the covers.
29) Put one *robot cover* and one *robot cover to be wheeled* on opposite positions right in front of the mark (as indicated in the drawing above).
30) Connect the *aluminium pipe* with the *table leg connector*.
31) Plug in the Thymio robot under the *robot cover*.
32) Put the *cover extension* in the holes of the covers. Use the tape to increase friction if the poles slide through too easily.
33) Put the *cover extension sphere* on the poles.

I.9.7 Spice-up

I.9.7.1 Task infrastructure

Units	Object description	Details / Model	Source	Provided by CYBATHLON
1	Shelving unit	Kallax 1x2	IKEA	
1	Back wall	black, to be screwd to the back o the Kallax	custom made	
1	Table	Sandsberg	IKEA	
1	Storage box	Nimm, 25x35x15cm	IKEA	
2	Card with target label	Example card can be downloaded from the dashboard for registered teams		To local hubs only
2	Spice jar	365+ lhärdig, 1 with black / 1 with white coloured paper on the inside	IKEA	
2	Squeeze bottle	Grilltider,1 with coloured paper on the inside (175x55mm)	IKEA	
2	Paper	1 brown / 1 army green coloured paper (145x170mm) with “oil” / “vinegar” label, printed from the file on the CYBATHLON dashboard for registered teams: 20240425_ROB__SPICE-UP__VINEGAR_OIL.pdf		To local hubs only

I.9.7.2 General task set-up

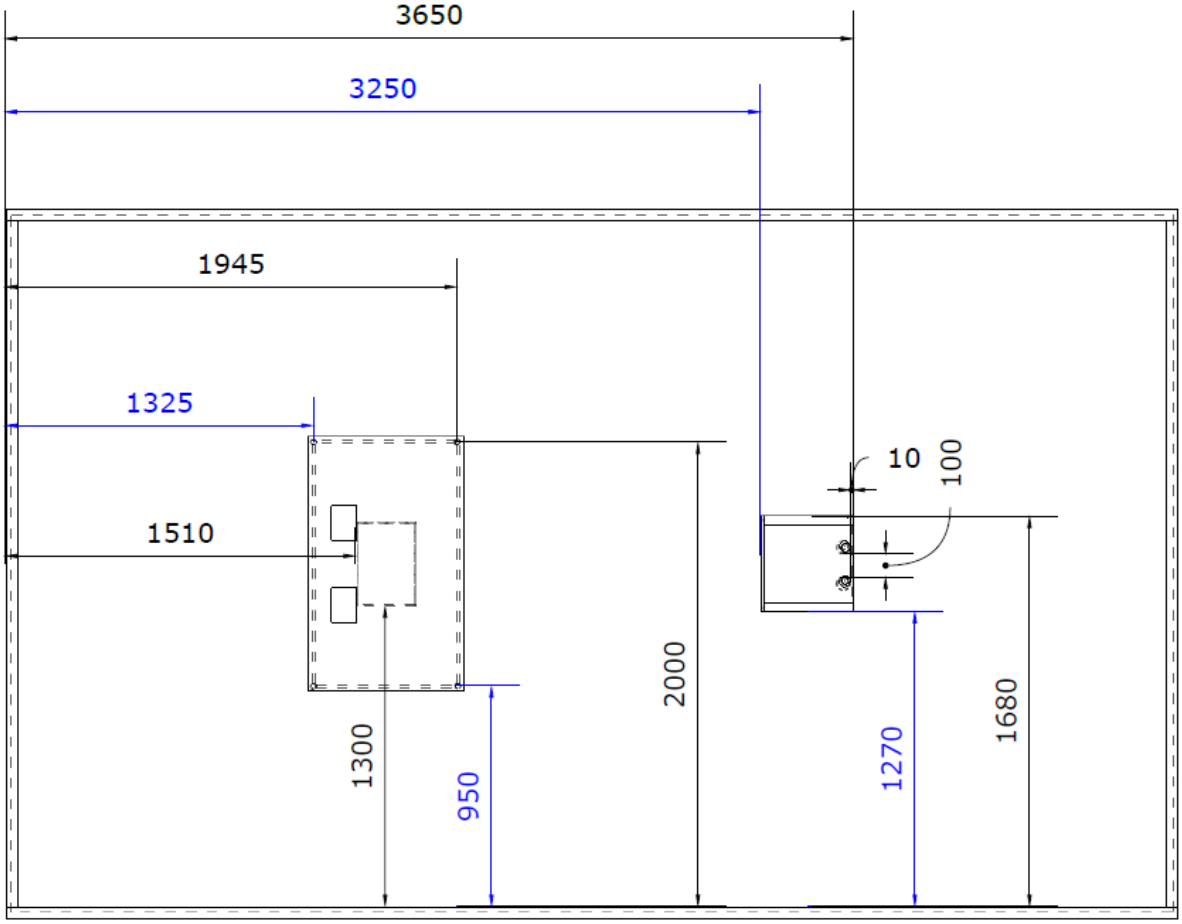

I.9.7.3 Infrastructure dimensions

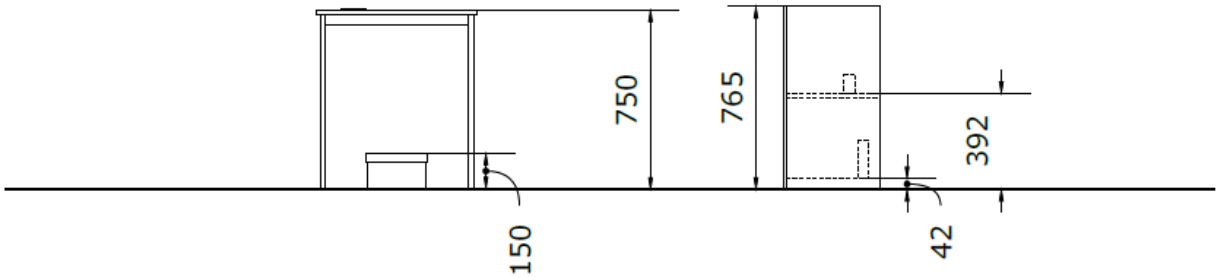

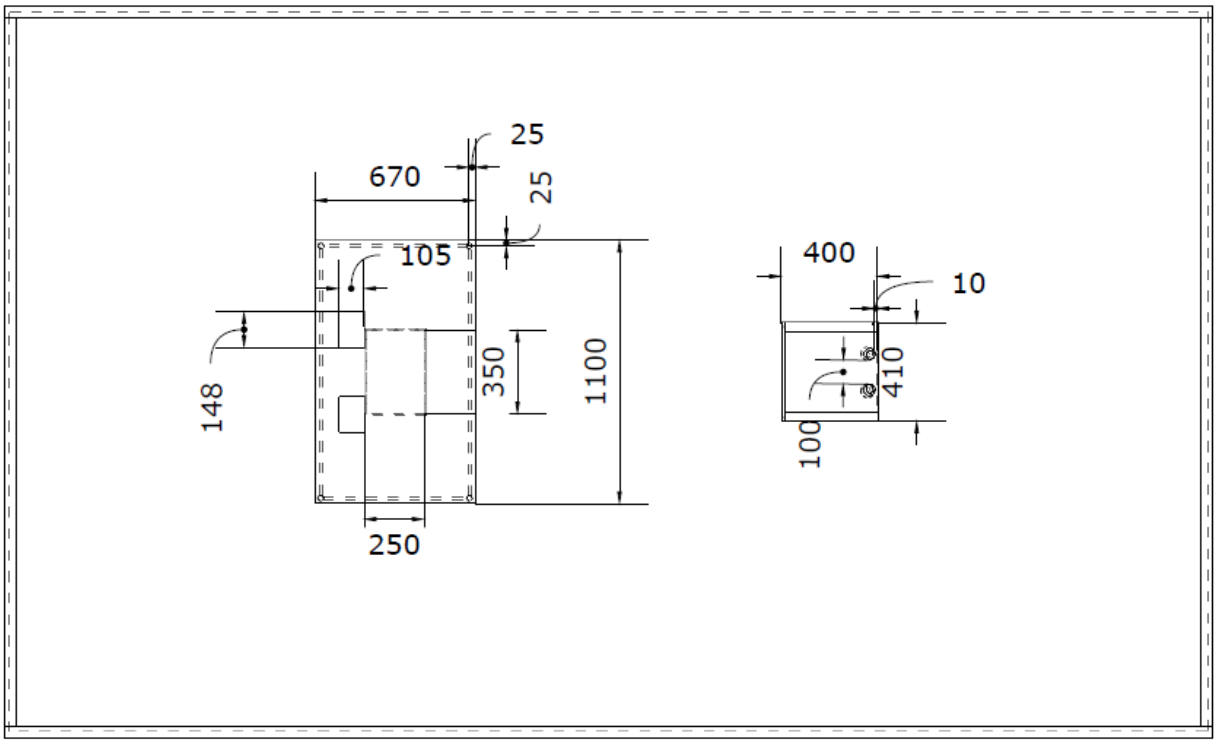
25
670
25
105
148
350
1100
250
400
10
410
100

I.9.8 Door

I.9.8.1 Task infrastructure

Units	Object description	Details / Model	Source	Provided by CYBATHLON
1	Doorframe rack	wood, CYBATHLON uses MDF	custom made	
1	Doorframe	Pertura CPL white	Hornbach	
1	Door left	Pertura Yori CPL white, left	Hornbach	
1	Door handle	Pertura BB Vitur alu F1	Hornbach	To local hubs only
1	Door knob		Hornbach	To local hubs only

I.9.8.2 General task set-up

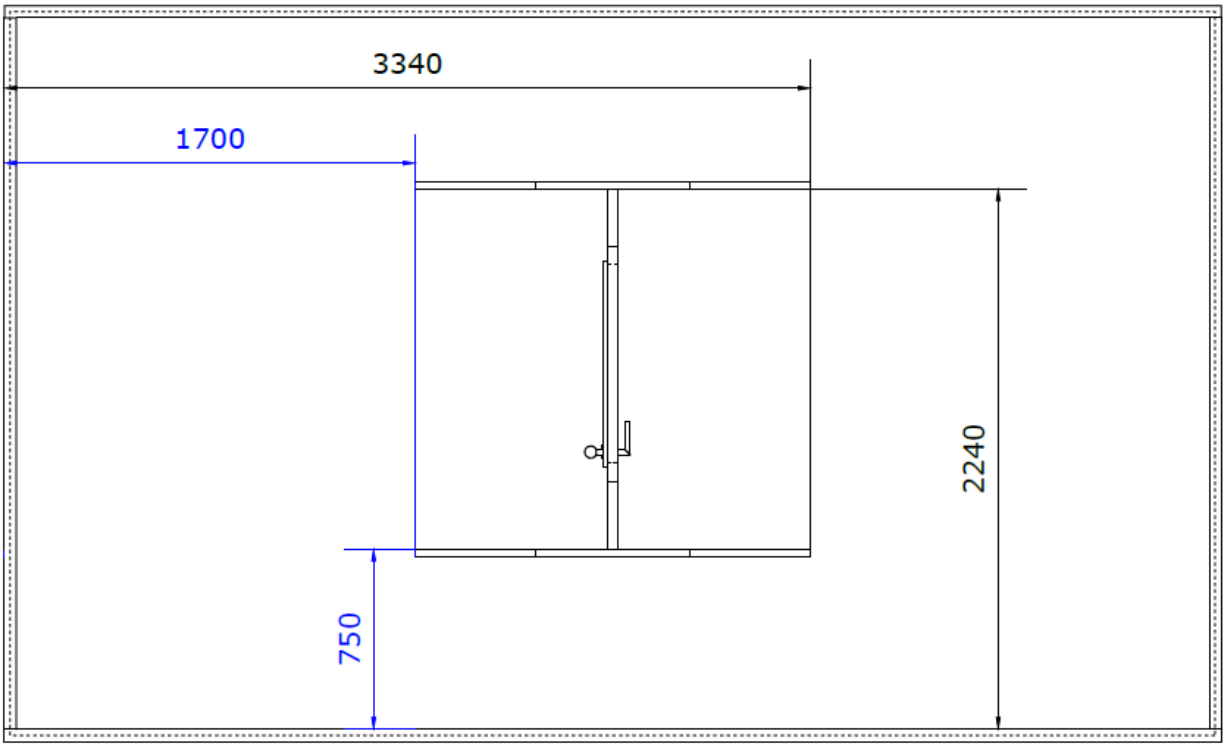

I.9.8.3 Infrastructure dimensions

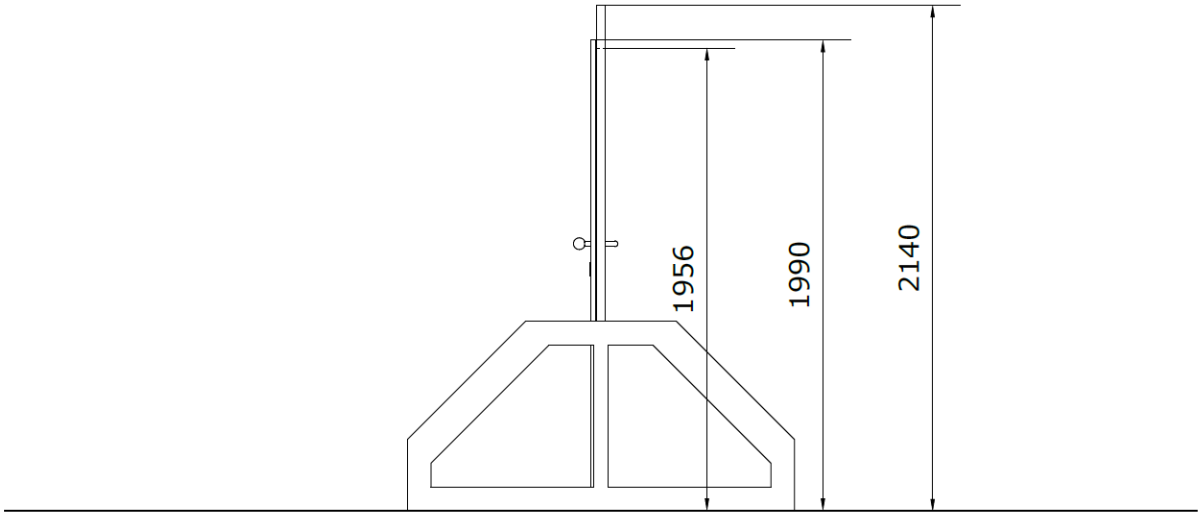

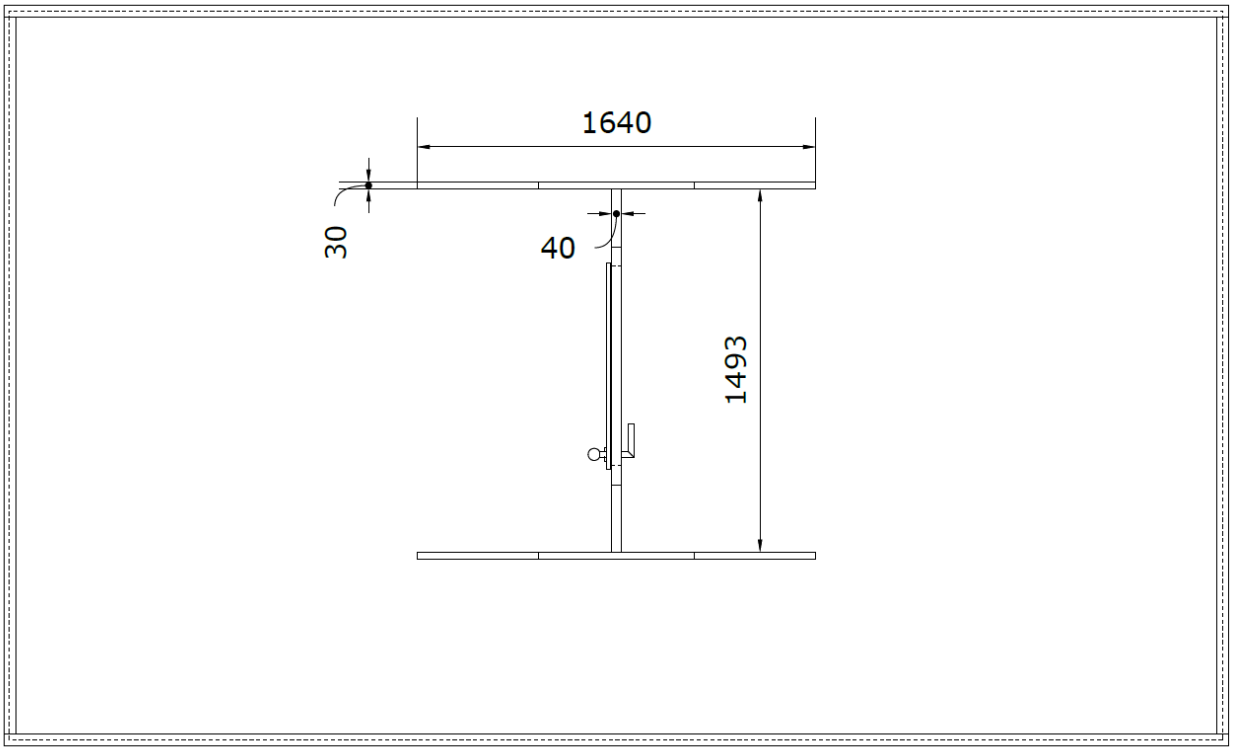

I.9.8.4 Door - assembly information

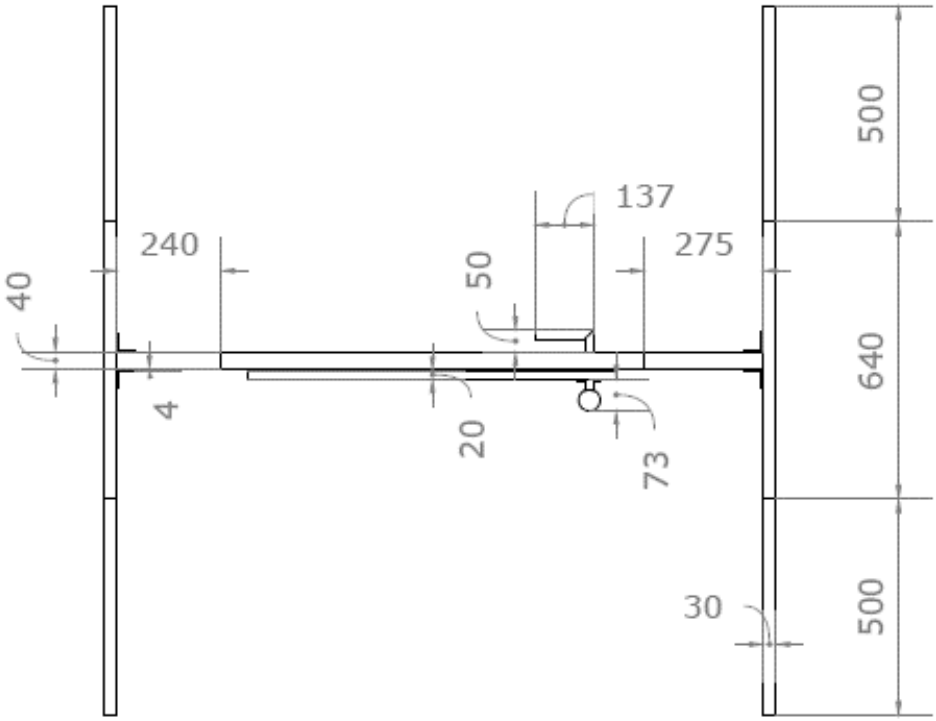

I.9.9 Touchscreen

I.9.9.1 Task infrastructure

Units	Object description	Details	Modifications
1	Shelving unit	Kallax 1x4	IKEA
1	Tablet fixation	See source or any similar model fulfilling the following specifications: - restrained design - preferred colours: black, grey	Durable
1	Tablet	Galaxy Tab A8 We recommend setting the tablets into "kiosk mode". This prevents pilots from exiting the CYBATHLON app or opening another app by mistake. https://www.youtube.com/watch?v=vRzOI-VDhA7s	Samsung

I.9.9.2 General task set-up

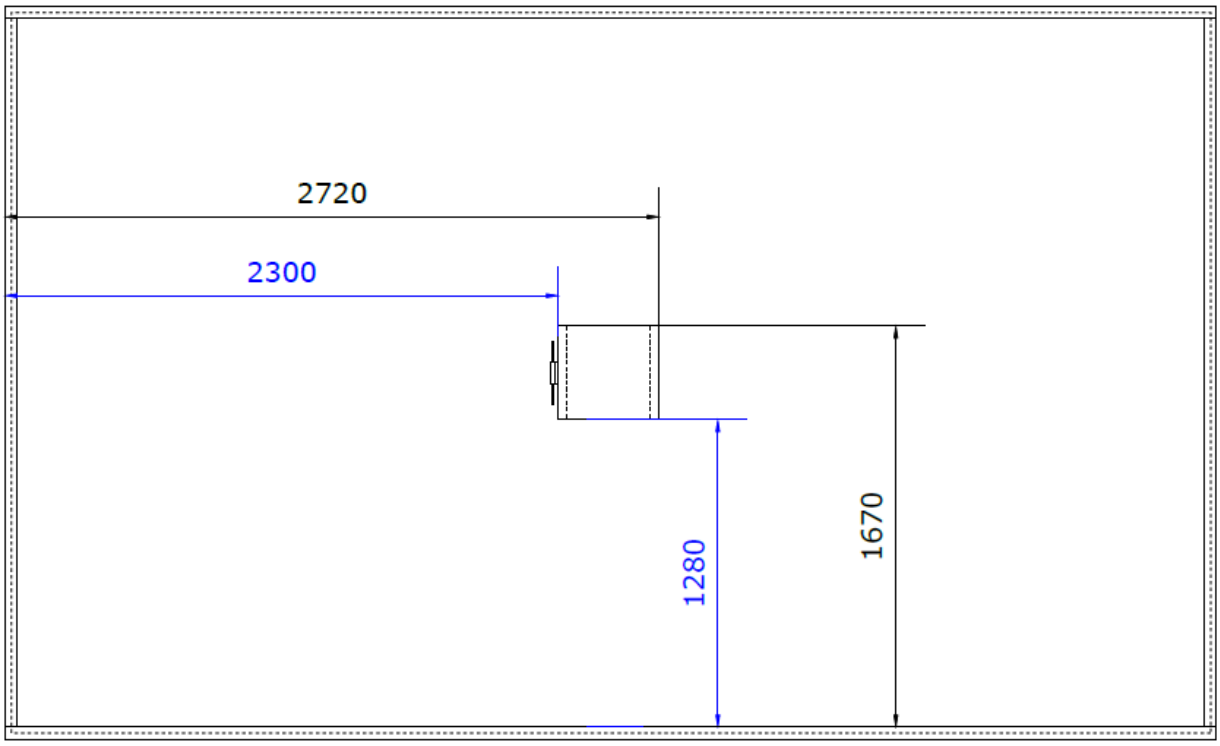

I.9.9.3 Infrastructure dimensions

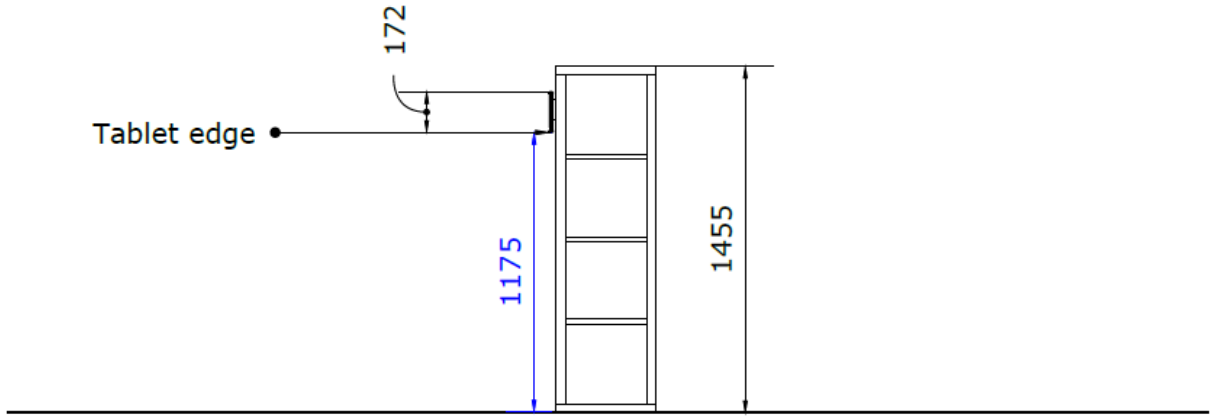

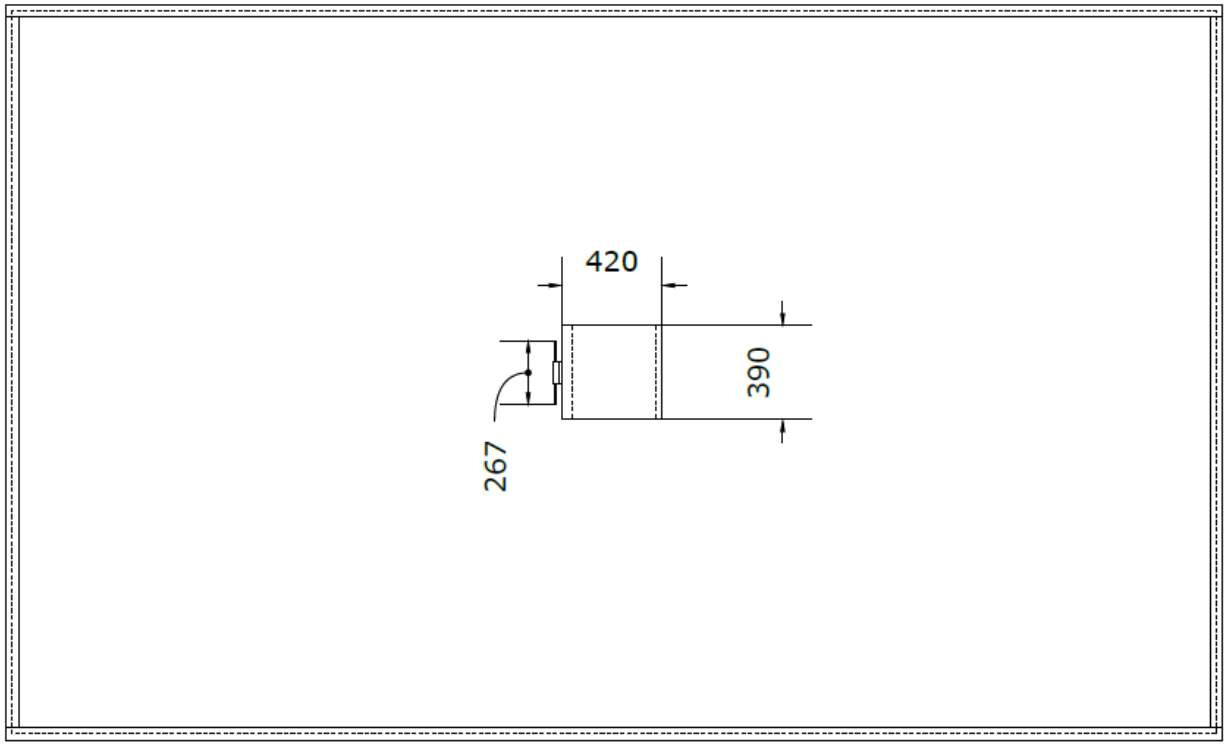

I.9.10 Dishwasher

I.9.10.1 Task infrastructure

Units	Object description	Details / Model	Source
1	Shelving unit, with front door	black	custom made
1	Wire basket	Utrusta, 40cm, adust the assembly with washers to ensure a good fit of the drawer runner	IKEA
3	Cup hinge	BLUM CLIP top BLUMOTION	OPO
1	Flap hinge left		OPO
1	Flap hinge right		OPO
1	Door handle	Bagganäs, 143cm	IKEA
1	Plate holder	Rinnig	IKEA
1	Plate	365+, 20cm	IKEA

I.9.10.2 General task set-up

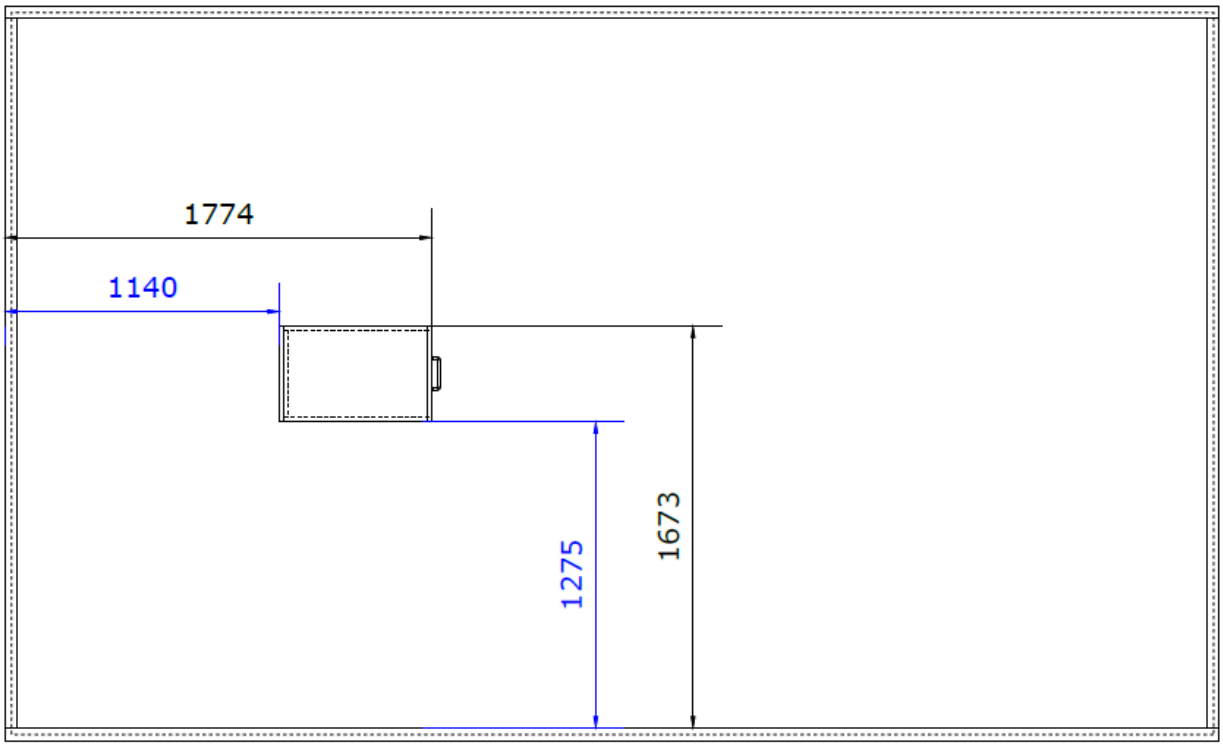

I.9.10.3 Infrastructure dimensions

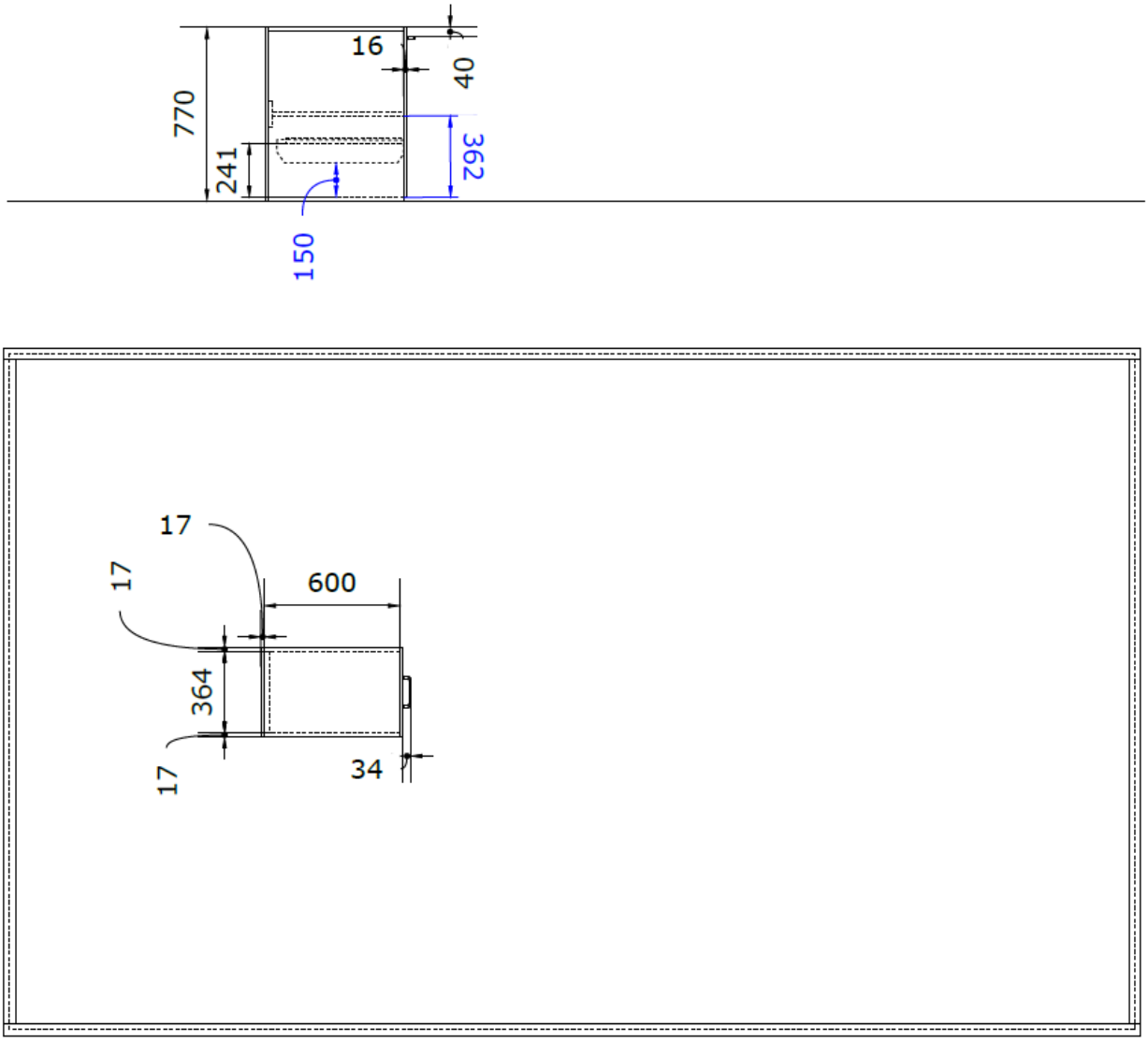

I.9.10.4 Hinges – assembly information

The hinges are mounted as presented in the picture. The positions of the hinges can be taken from the CAD model.

I.9.10.5 Plate holder – assembly information

The IKEA products Utrusta and Rinnig have to be mounted such that the lowest Utrasta wire is 150mm above the wooden board (inner height). The plate holder Rinnig has to be mounted close to the third wire counted from the front (see pictures above).

I.10 VIS

I.10.1 Dish up

I.10.1.1 Task infrastructure

Units	Object description	Details / Modelp	Source
1	Shelving unit	Kallax 2x2	IKEA
1	Tray	Fruktskal, 35x23 cm	IKEA
1	Anti-slip underlay	White, in the tray	IKEA
1	Deep plate, filled with red liquid	Oftast, 20cm, empty weight: 280g, filled with 0.2l of red liquid (water-like viscosity: 480g, weight tolerance: +/- 50g	IKEA
1	2dl mark on plate	Length 20-25mm, thickness: <3mm	custom made
1	Food colouring	red, ca. 5 drops	TRAWOSA, or similar
1	Spoon	365+	IKEA
1	Table	Sandsberg	IKEA
1	Table mat	A3 paper, white	custom made
1	PET bottle white transparent, (0.5l, filled with red liquid, and white bottle cap)	empty weight (with cap): 26g, filled with 0.5l of red liquid (water-like viscosity, see food colouring): 526g, weight tolerance: +/- 50g	bottleshop
1	Bottle cap	Water closure white Code: 12820011M1, loosely mounted (1 turn)	bottleshop
1	Drinking glass	365+ 45cl, visual, non-haptic mark 2cm under the brim, length 20-25mm, thickness: <3mm	IKEA

I.10.1.2 General task set-up

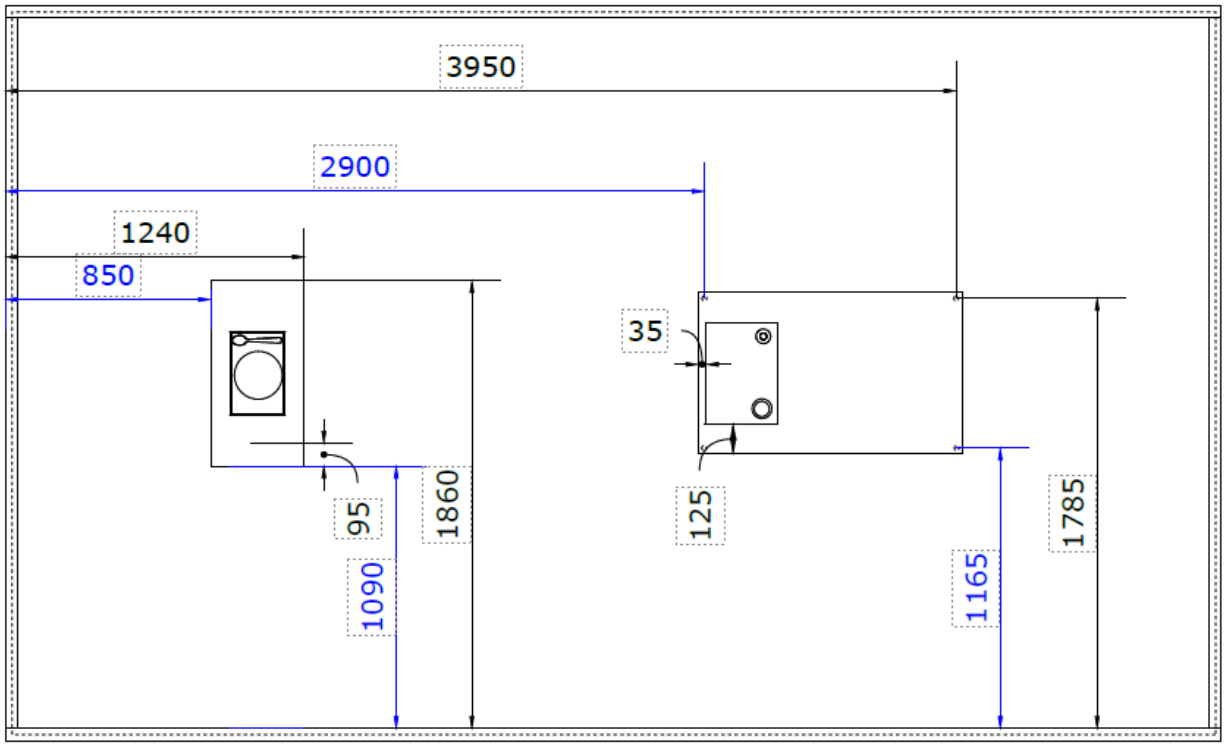

I.10.1.3 Infrastructure dimensions

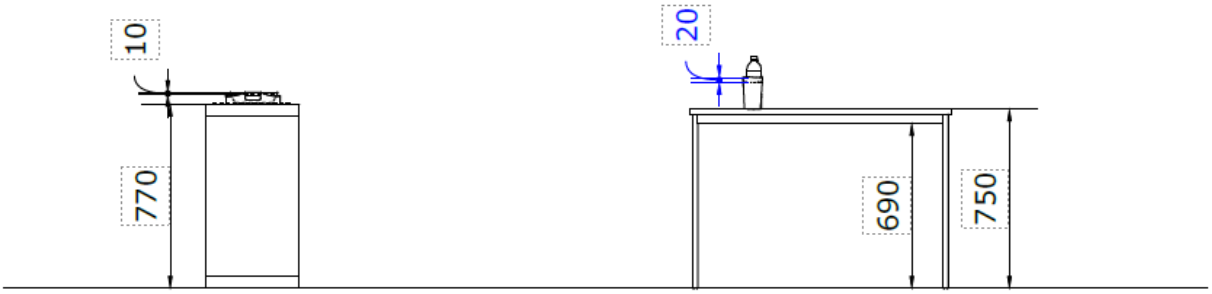

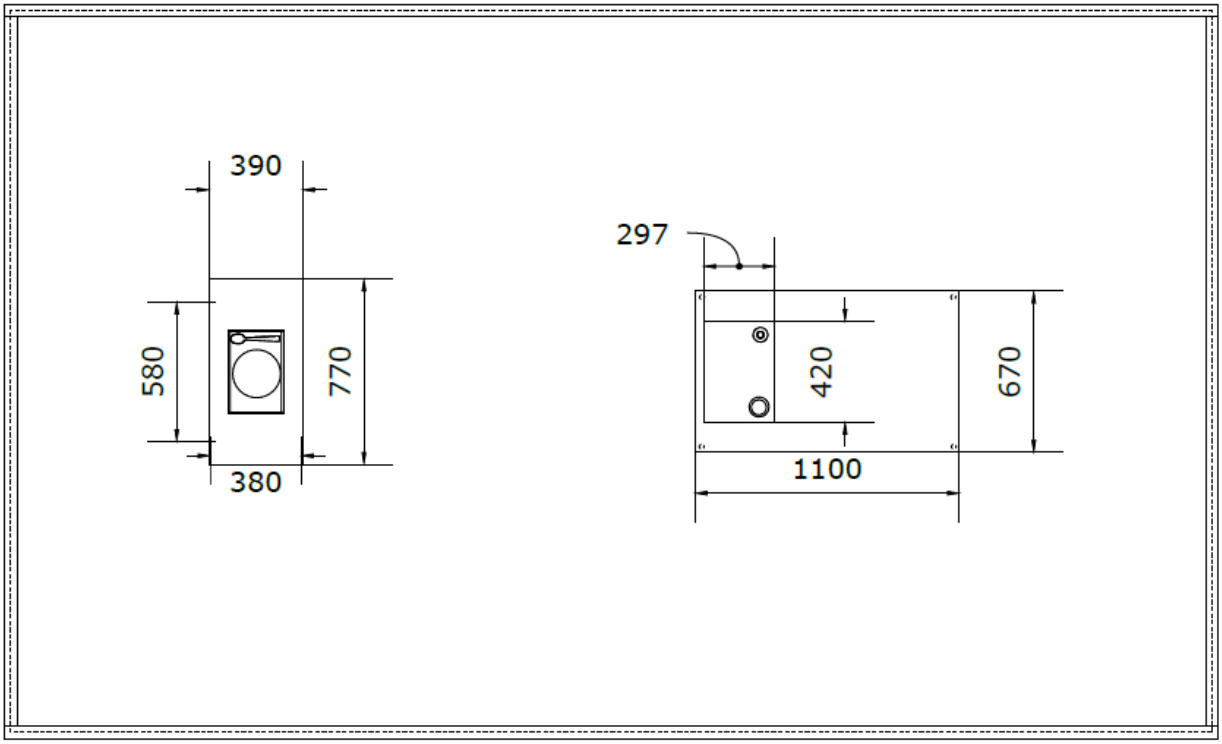
390
580
770
380
297
420
670
1100

I.10.2 Doorbell

I.10.2.1 Task infrastructure

Units	Object description	Details / Model	Source	Provided by CYBATHLON
1	Side table	Lack (black or black brown)	IKEA	
1	Storage box	Nimm, 25x35x15cm	IKEA	
1	Card with name	Paper, A6, fontsize 36	custom made	To local hubs only
1	Wardrobe frame, dark grey	Pax, 100x58x236cm, (new product number will be released in spring 2024)	IKEA	
2	Sidewall		custom made	
1	Doorbell unit	black, 3D-printed from the file on the CYBATHLON dashboard for registered teams: 20231205_VIS__DOORBELL__DOORBELL_UNIT.stl 20231205_VIS__DOORBELL__BATTERY_HOLDER_RIGHT 20231205_VIS__DOORBELL__BATTERY_HOLDER_LEFT	PRUSA	
1	Buttons subunit	the full button subunit will be provided to local hubs, 8 buttons	custom made	To local hubs only
20	Labels for doorbell	Example card can be downloaded from the dashboard for registered teams	custom made	To local hubs only

I.10.2.2 General task set-up

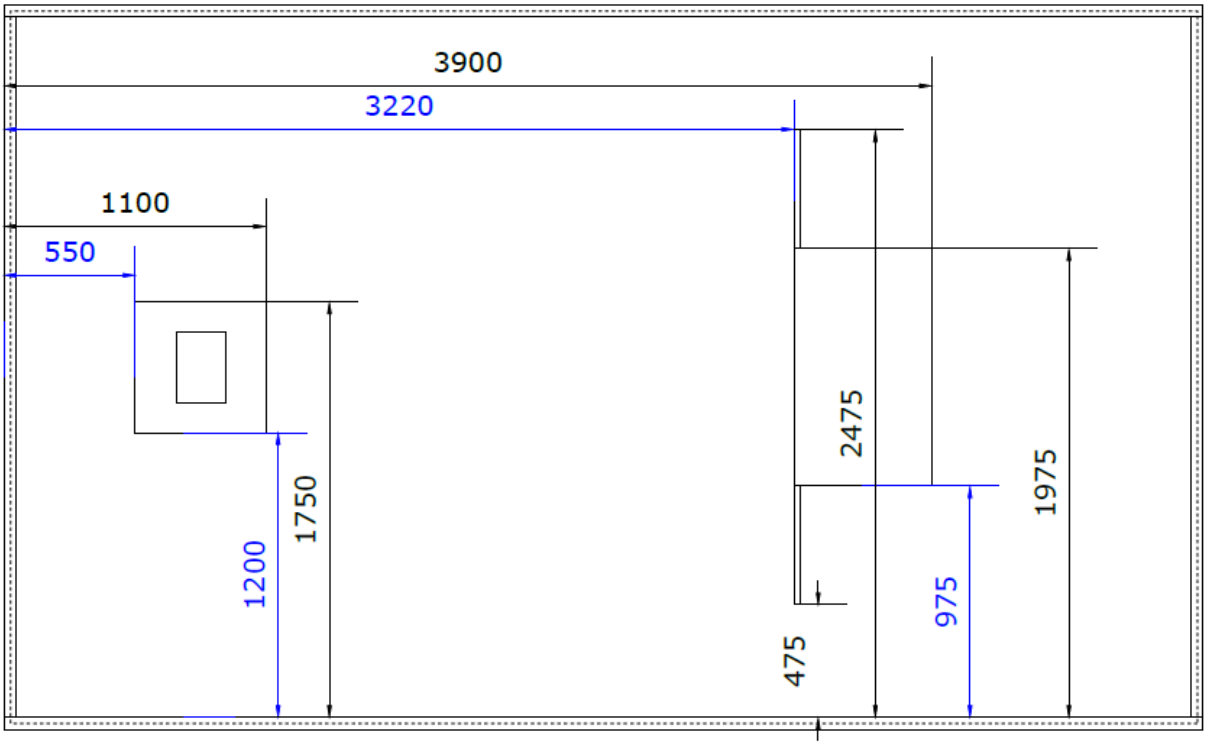

I.10.2.3 Infrastructure dimensions

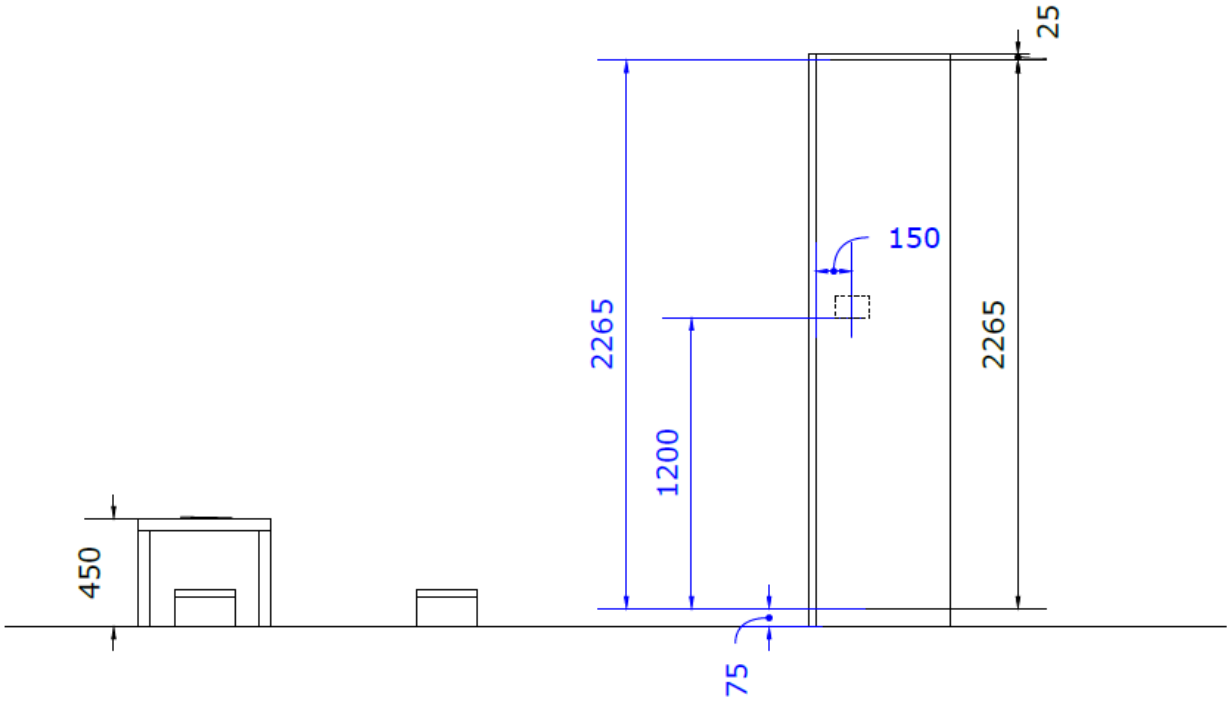

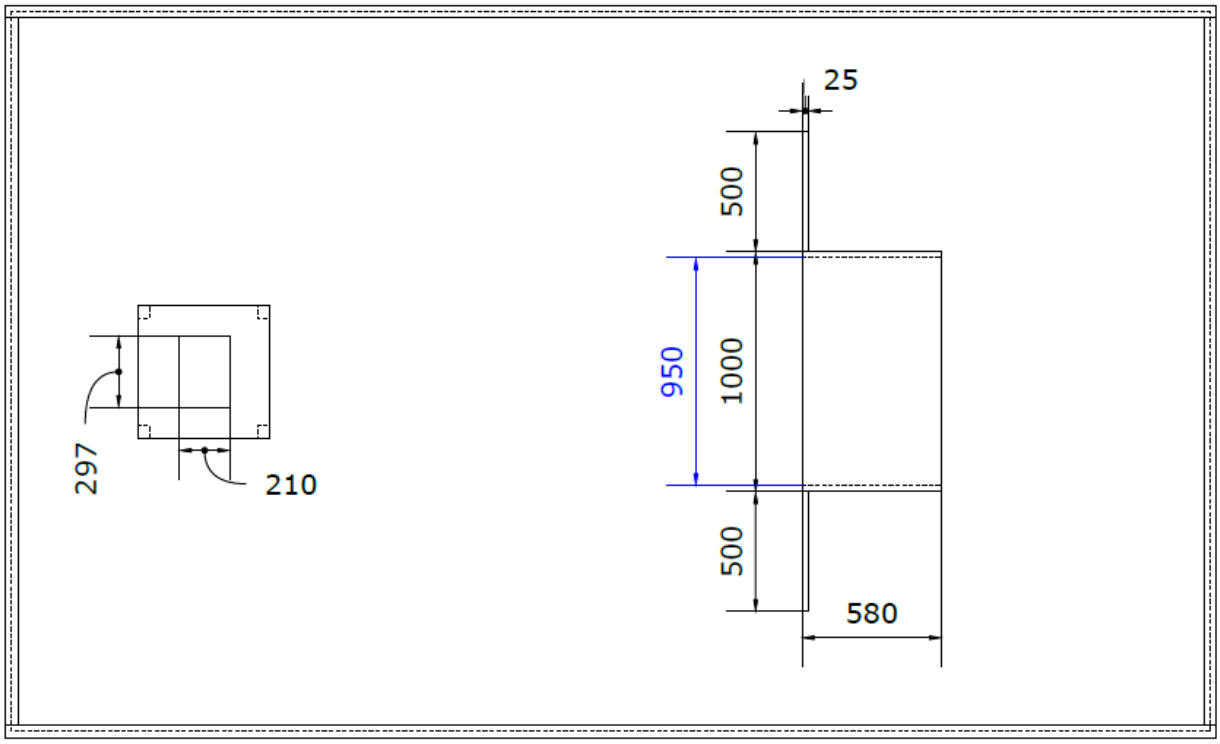
25
500
950
1000
500
580
297
210

I.10.3 Empty Seats

I.10.3.1 Task infrastructure

Units	Object description	Details / Model	Source
6	Chair	Adde	IKEA
3	Backpacks	Pivring, 9l	IKEA
2	Volunteers		-
3	Filling of backpacks	Närsen	IKEA
1	Shelving unit	Kallax 1x2	IKEA
1	Box	Dröna, 33x38x33cm, to store spare task material	IKEA
1	Frame (2x3)	black, 3D-printed from the file on the CYBATH-LON dashboard for registered teams: 20230620_VIS__EMPTY_SEATS__FRAME.stl	PRUSA
6	Results display cubes	white, 3D-printed from the file on the CYBATH-LON dashboard for registered teams: 20230620_VIS__EMPTY_SEATS__CUBE.stl	PRUSA

I.10.3.2 General task set-up

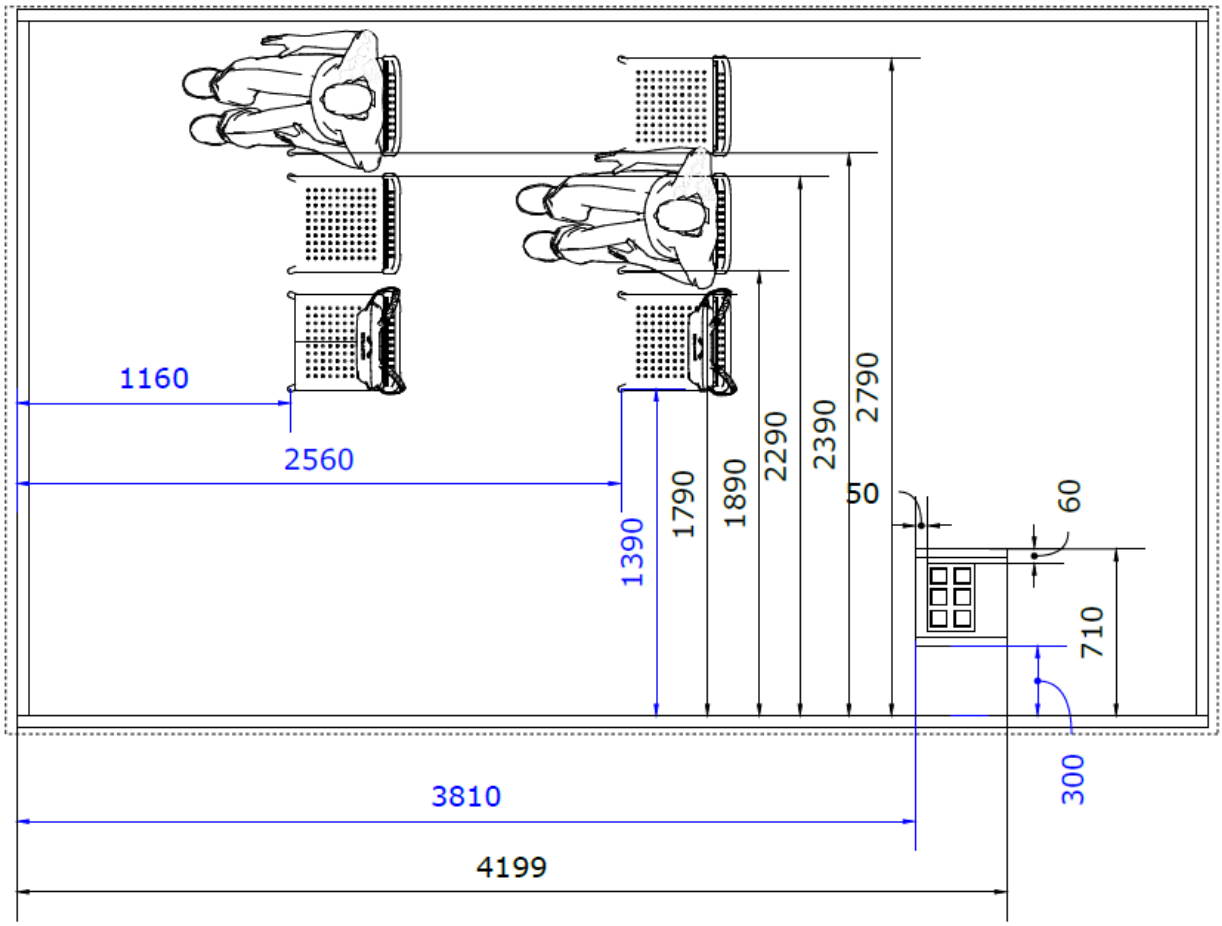

I.10.3.3 Infrastructure dimensions

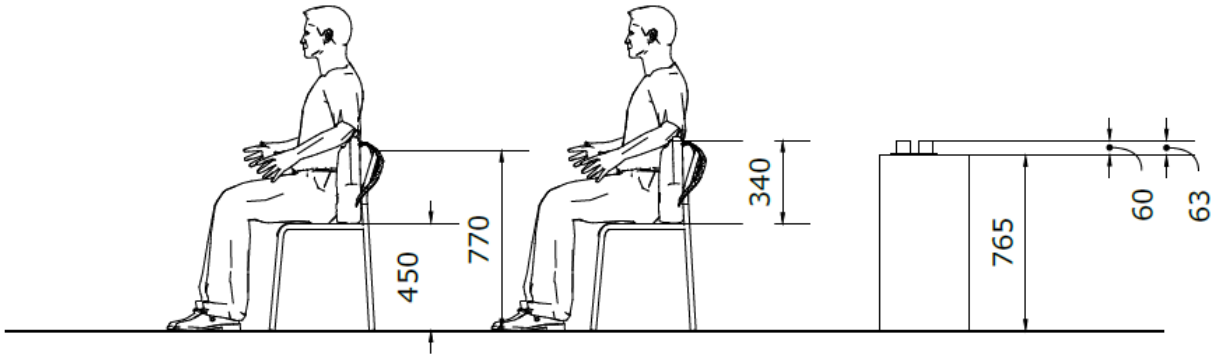

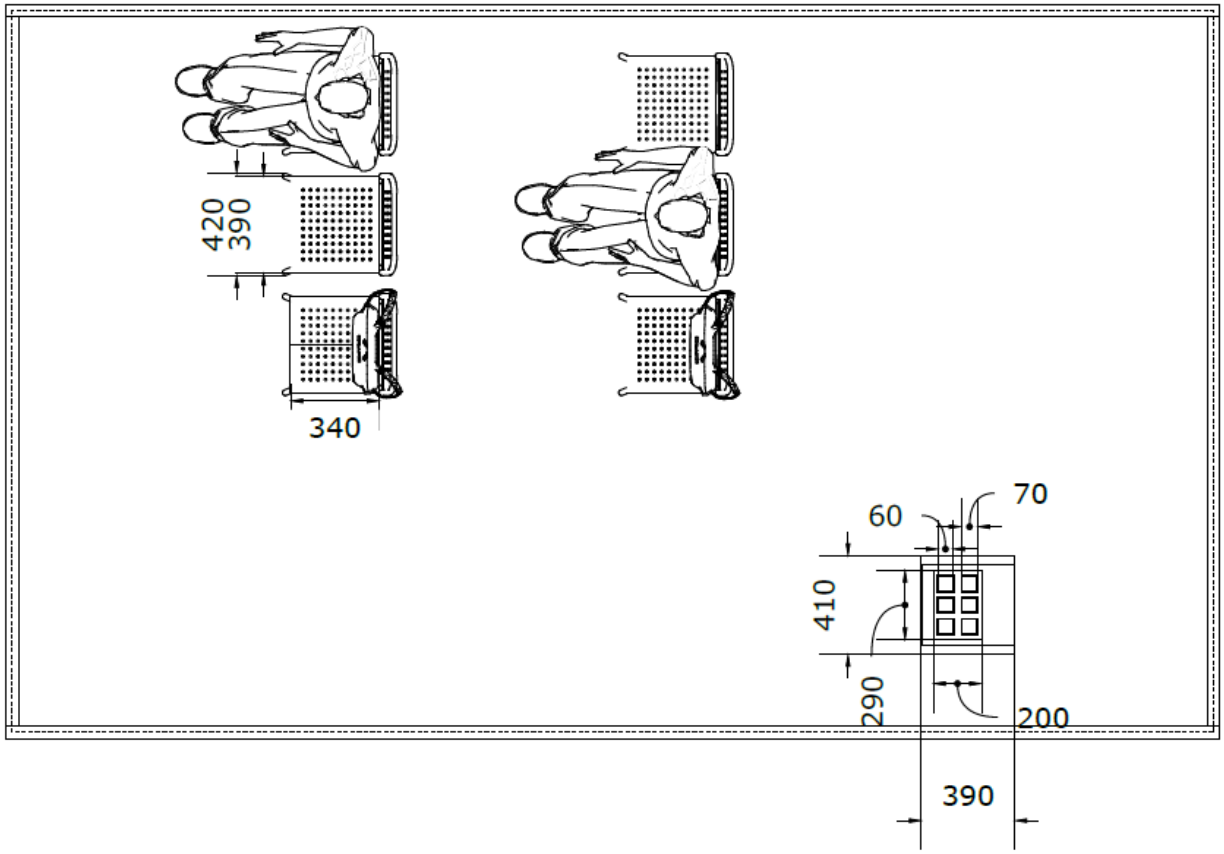
420
390
340
60
70
410
290
200
390

I.10.4 Grocery

I.10.4.1 Task infrastructure

Units	Object description	Details / Model	Source	Provided by CYBATHLON
1	Side table	Lack (black or black brown)	IKEA	
1	Card with target label		-	To local hubs only
1	Storage box	Nimm, 25x35x15cm	IKEA	
1	Shelving unit	Hejne, 78x31x171cm, shortened in height	IKEA	
16	Guiding rails	wooden rails, 4x4x260mm	custom made	
20	Box	70x70x120mm	AliExpress	
20	Label	labels can be downloaded from the dashboard for registered teams		To local hubs only

I.10.4.2 General task set-up

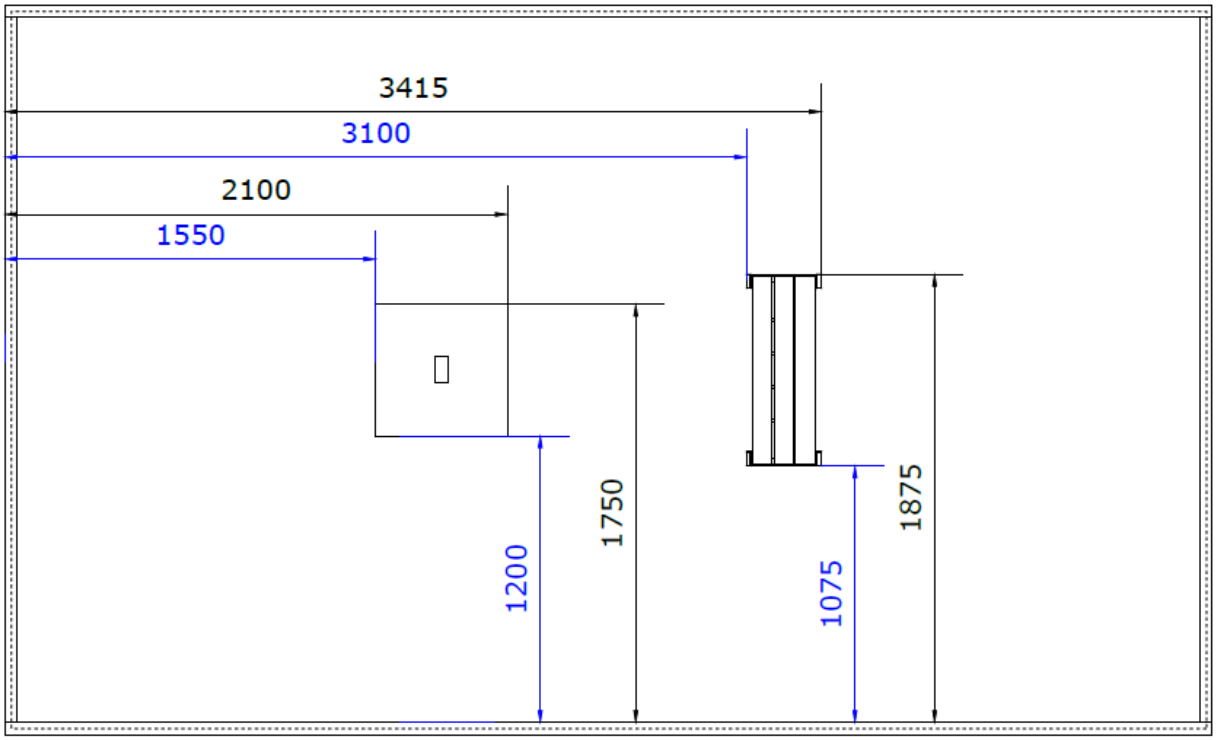

I.10.4.3 Infrastructure dimensions

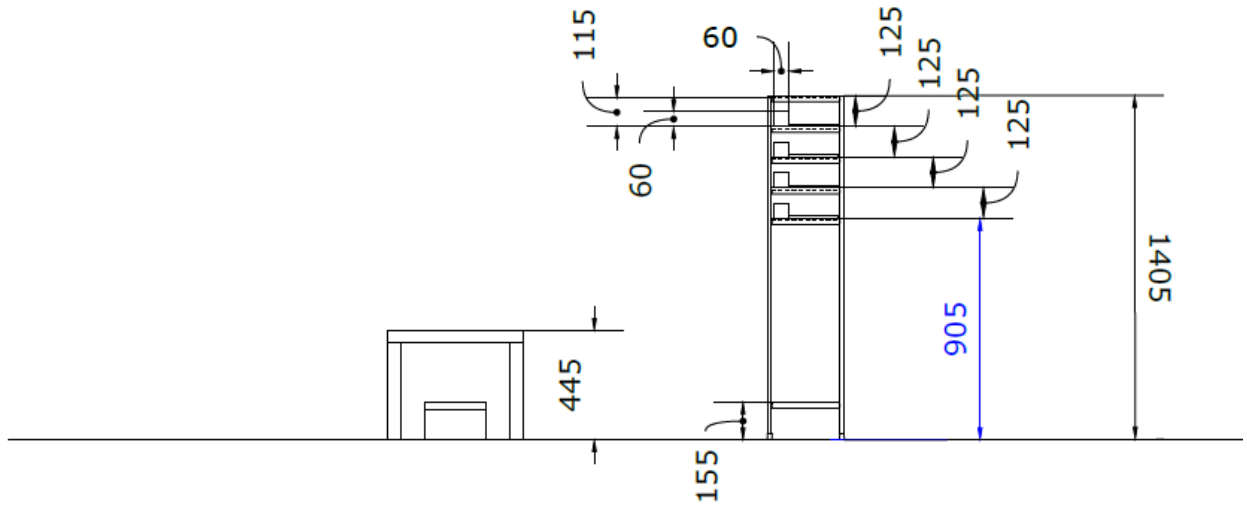

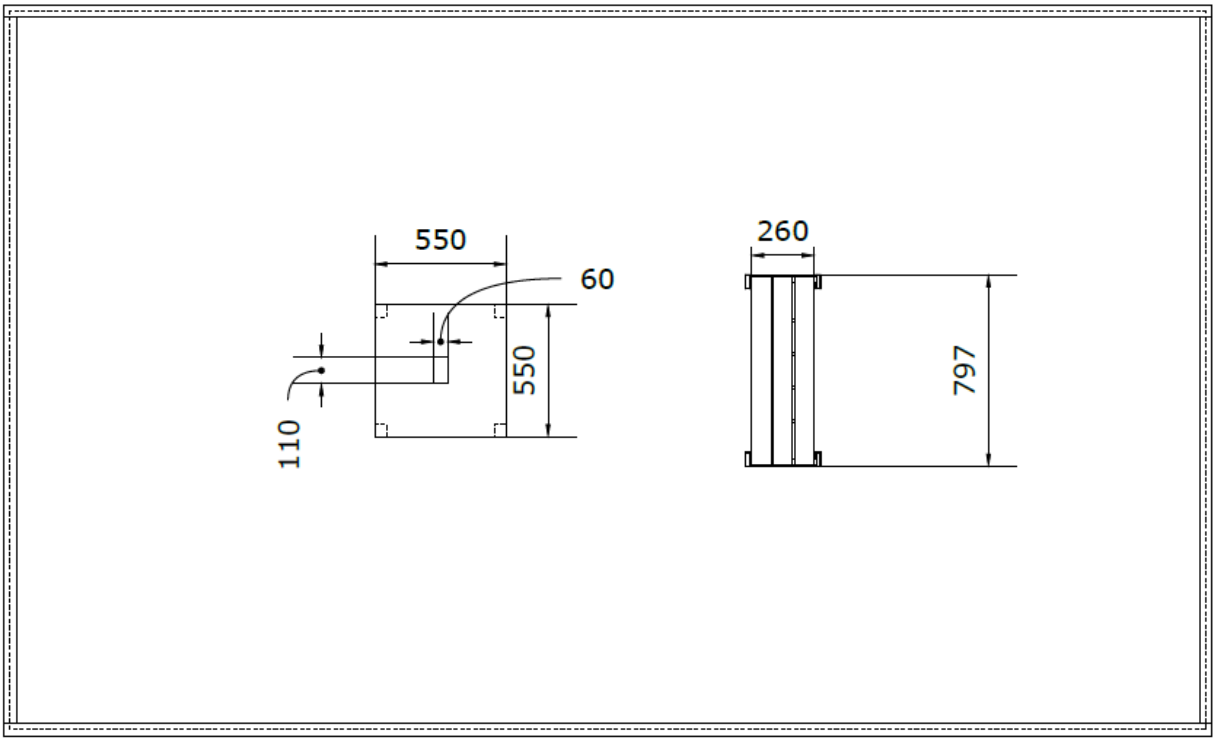

I.10.5 Sidewalk

I.10.5.1 Task infrastructure

Units	Object description	Details / Model	Source
1	Grid		custom made
1	Chair	Adde	IKEA
1	PET bottle white transparent (0.5l)	empty	bottleshop
1	Bottle cap	Water closure white, Code: 12820011M1	bottleshop
2	Scooter	See source or any similar model fulfilling the following specifications: - Board width 50mm +/- 20mm - Wheel height + mudguard: 220mm +/-20mm - Length: 890mm +/-20mm - Red and blue cannot be the main colour of the scooter.	Hudora
2	Waste bin	Knodd, 16l	IKEA
1	Customer stopper	See source or any similar model fulfilling the following specifications: - Width 630mm +/- 20mm - Clearance height (unfolded) 330mm +/-20mm - Height (unfolded) 1180mm +/-20mm	GONSER

I.10.5.2 General task set-up

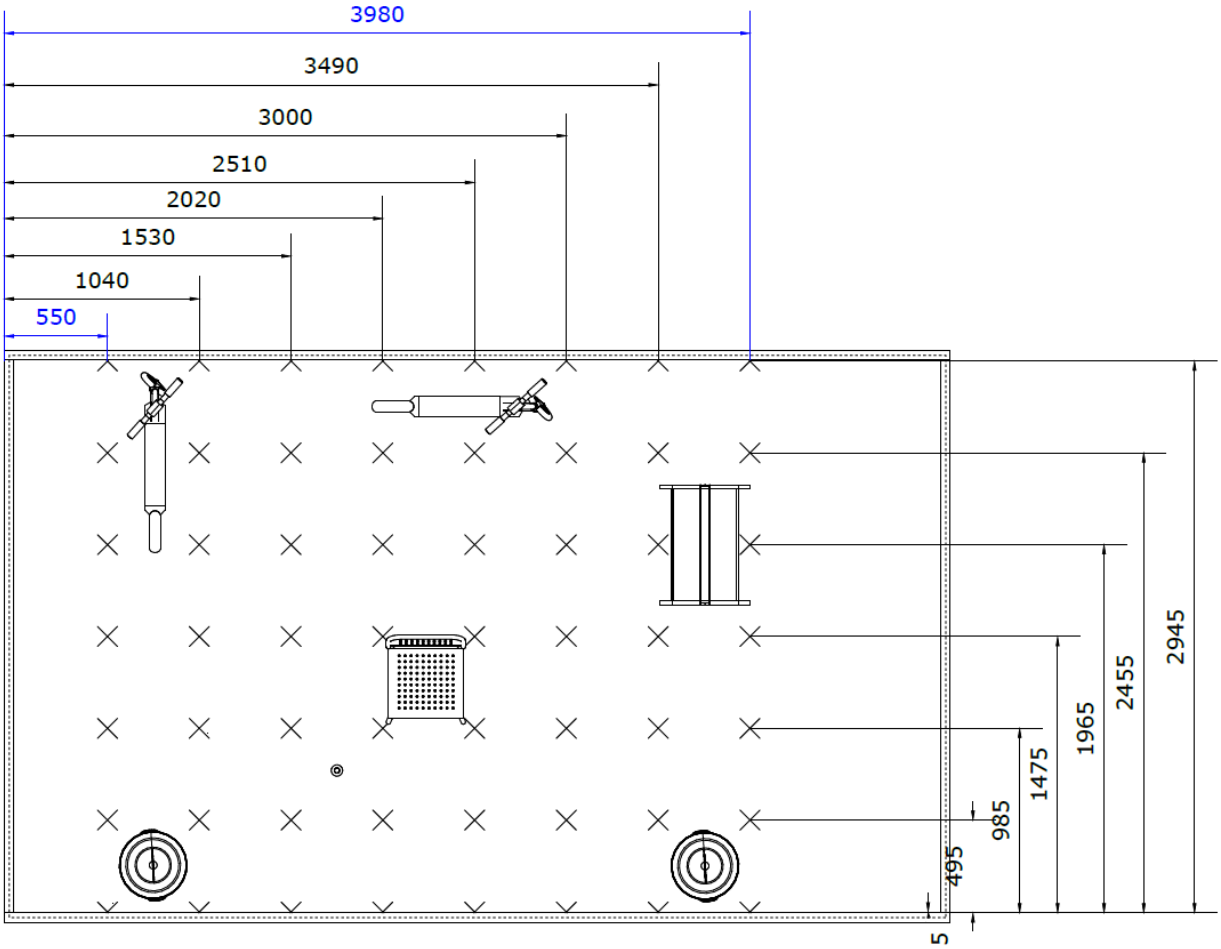

I.10.5.3 Infrastructure dimensions

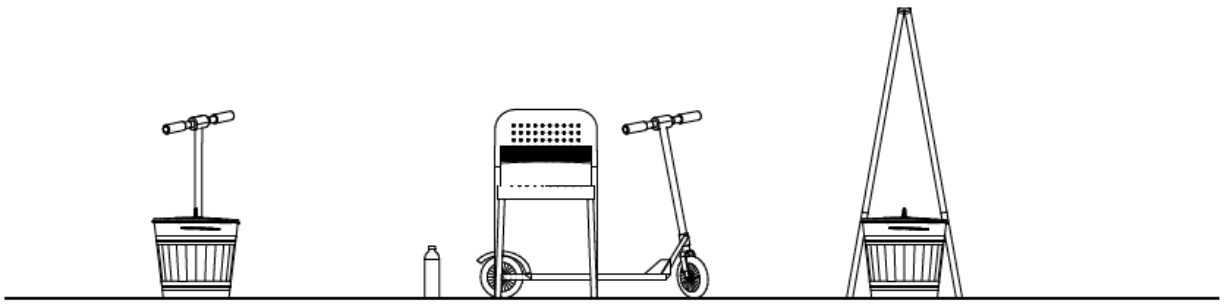

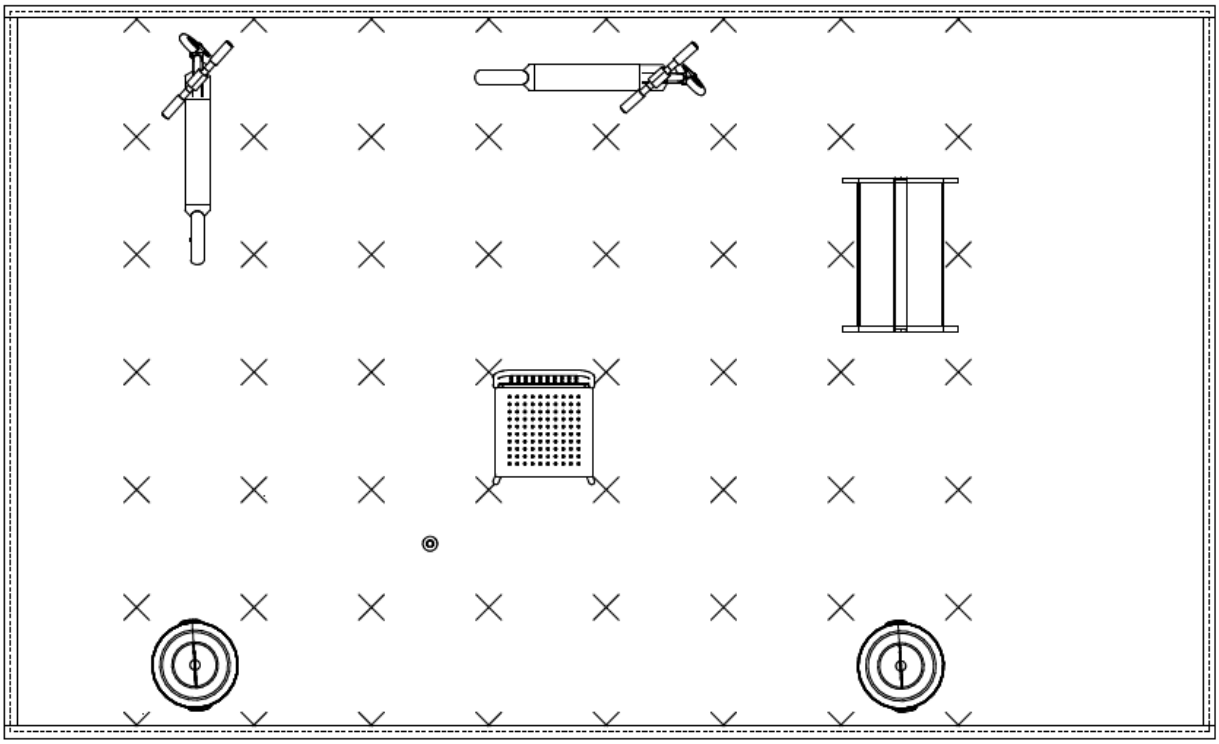

I.10.5.4 Specific marking instructions

The crosses indicating the grid must be set according to the general marking specification (see I.2.4.2).

I.10.6 Finder

I.10.6.1 Task infrastructure

Units	Object description	Details / Model	Source	Provided by CYBATHLON
2	Side table	Lack (black or black brown)	IKEA	
2	Storage box	Nimm 25x35x15cm	IKEA	
1	Box	Samla 28x19x14, 5l	IKEA	
2	Coffee mug, **black**	Backig, 35cl	IKEA	
2	Toothbrush, yellow		TEPE	To local hubs only
2	Smart phone replica, **black**		AMAZON	To local hubs only
3	Apple, green		GMMH	To local hubs only
2	Banana, yellow		Frutiger Display	To local hubs only
2	PET bottle (0.5l), **green**		VALSER	To local hubs only
2	Bottle cap, **green**		VALSER	To local hubs only
1	Serving bowl	Rundlig, 30cm diameter	IKEA	

I.10.6.2 General task set-up

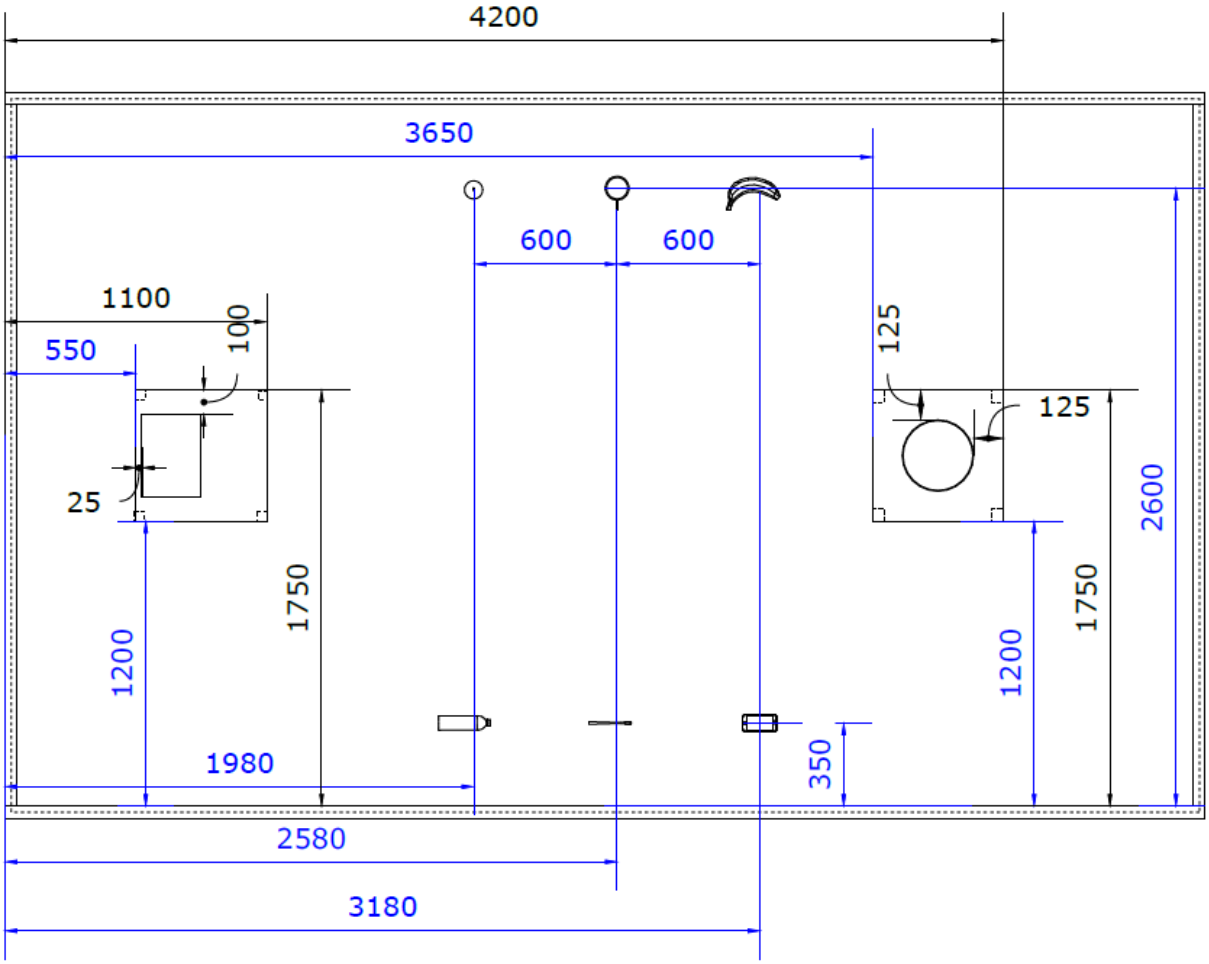

I.10.6.3 Infrastructure dimensions

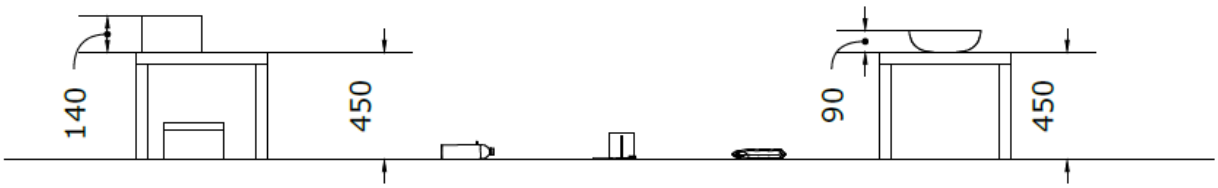

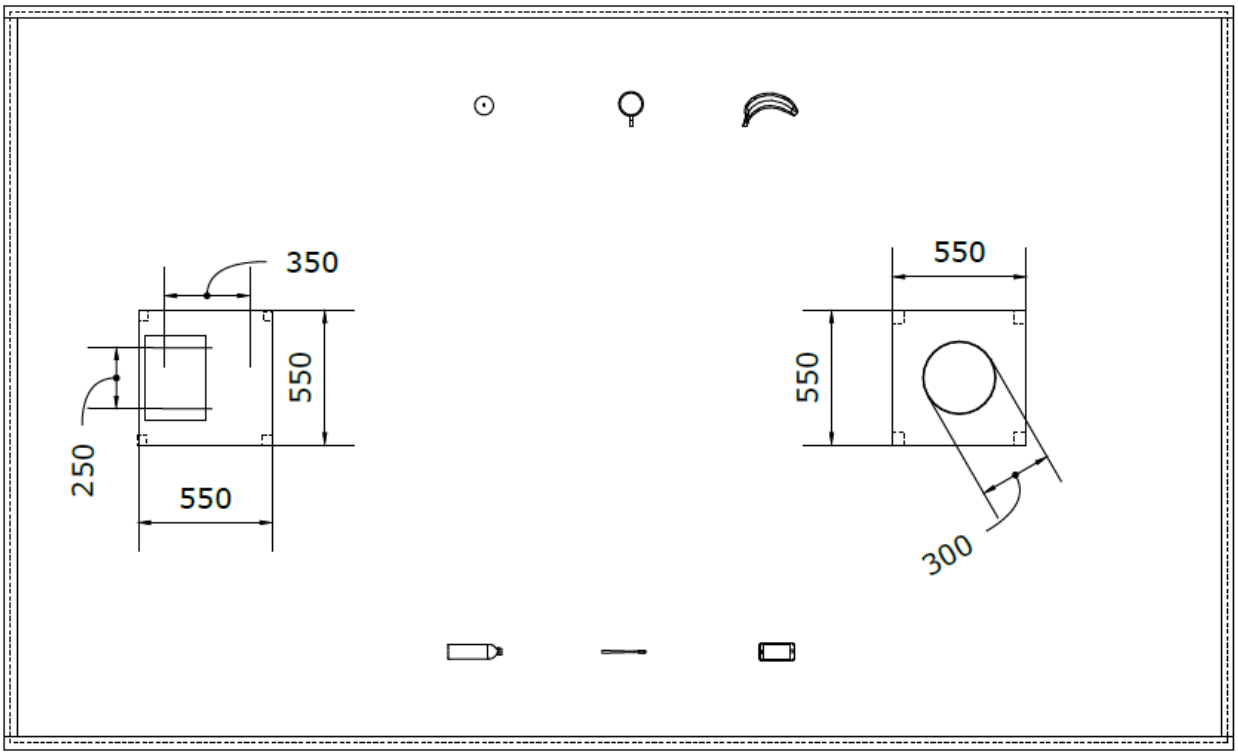

I.10.6.4 Specific marking instructions

The position of the six objects must be marked with crosses. The crosses must be set according to the general marking specification (see I.2.4.2).

I.10.7 Footpath

I.10.7.1 Task infrastructure

Units	Object description	Details / Model	Source
5	Hexagon, fronts and sides are coloured red	Wooden (same within all task), different lengths, the hexagons can be joined in any order to form a path, thickness of wooden plates between 10mm and 20mm, use an anti-slip underlay to increase friction below the hexagons	custom made
2	Arrow head, fronts are coloured red	Wooden (same within all task), same thickness as for hexagons use an anti-slip underlay to increase friction below the hexagons	custom made

I.10.7.2 General task set-up

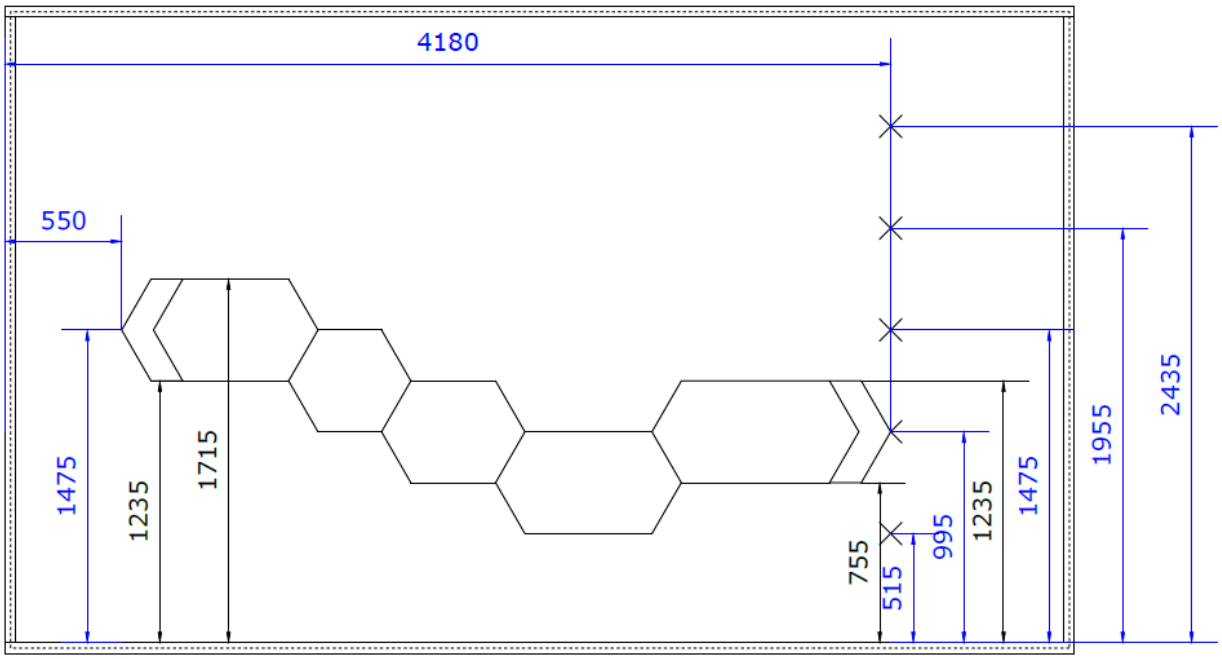

I.10.7.3 Infrastructure dimensions

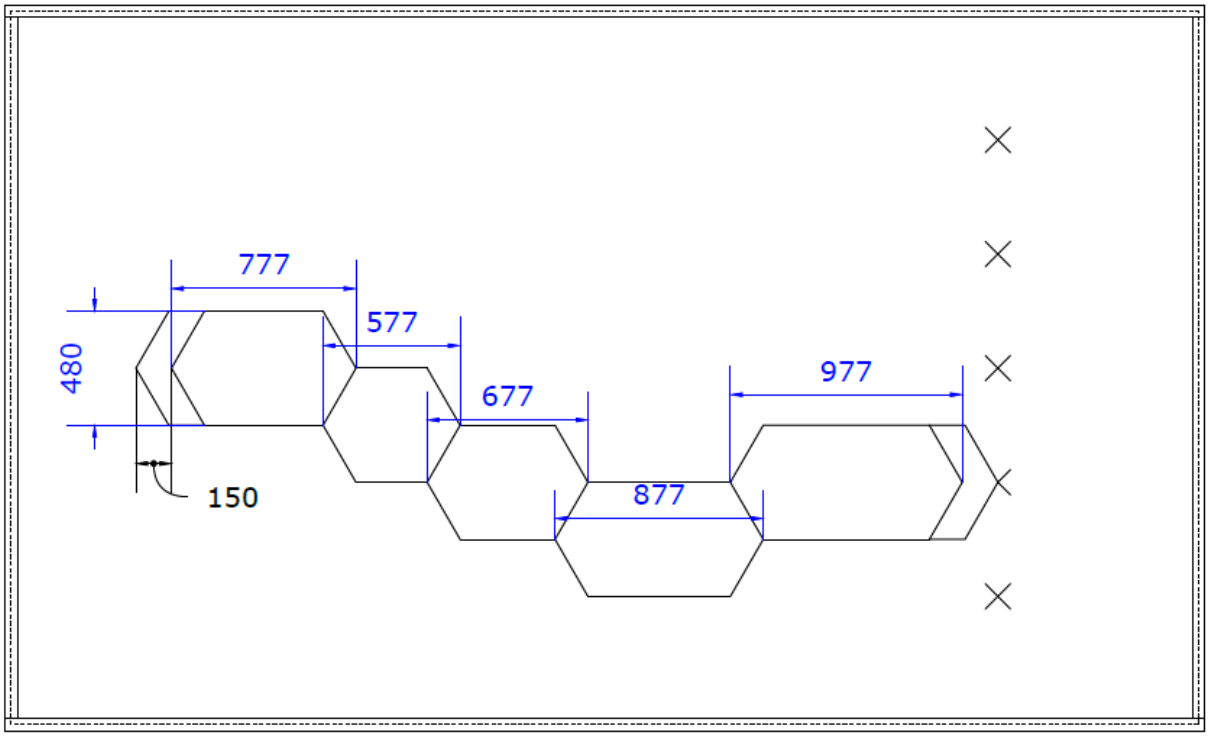

I.10.7.4 Hexagon & Arrow heads – colouring information

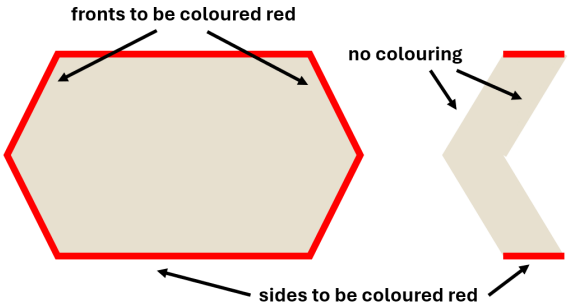

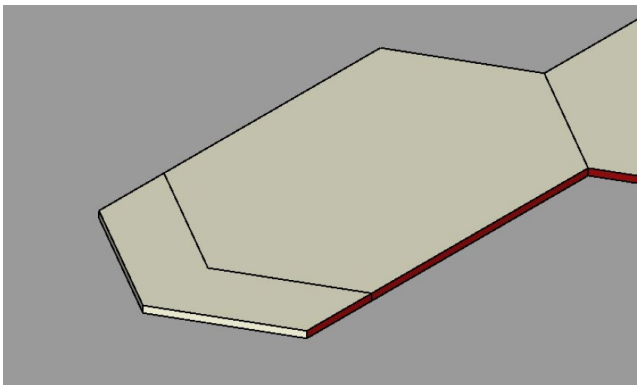

I.10.7.5 Specific marking instructions

The crosses indicating possible end points of the footpath must be set according to the general marking specification (see I.2.4.2).

I.10.8 Colours

I.10.8.1 Task infrastructure

Units	Object description	Details / Model	Source	Provided by CYBATHLON
1	Clothes rack	Turbo	IKEA	
18	Hanger	black, Bumerang	IKEA	
15	Fabric sheets	DIN A3 size, different colours; printed on one sides, folded over hanger to DIN A4 size .png files can be downloaded from the dashboard for registered teams	custom made	To local hubs only , examples to all registered teams
1	Storage box with lid	NIMM, 35x50x30, to store fabric sheets	IKEA	

I.10.8.1.1 Colours used for fabric sheets

Colour changes due to switching to CYMK codes.

	Magenta			Cyan		
	light	middle	dark	light	middle	dark
C	5.44	45.49	72.5	19.16	76.54	88.82
M	23.33	81.56	100	0	14.35	42.86
Y	0.02	0	25.17	6.01	40.34	55.72
K	0	0	16.27	0	1.12	46.99

	Blue			Red			Green		
	light	middle	dark	light	middle	dark	light	middle	dark
C	38.54	86.94	100	0	0	32.46	22.02	79.03	88.53
M	33.83	71.15	93.17	24.79	96.69	99.85	0	3.43	41.75
Y	0.01	0.02	41.01	12.51	92.1	98.19	27.23	99.95	100
K	0	0	47.87	0	0.16	48.55	0	0.07	45.42

I.10.8.2 General task set-up

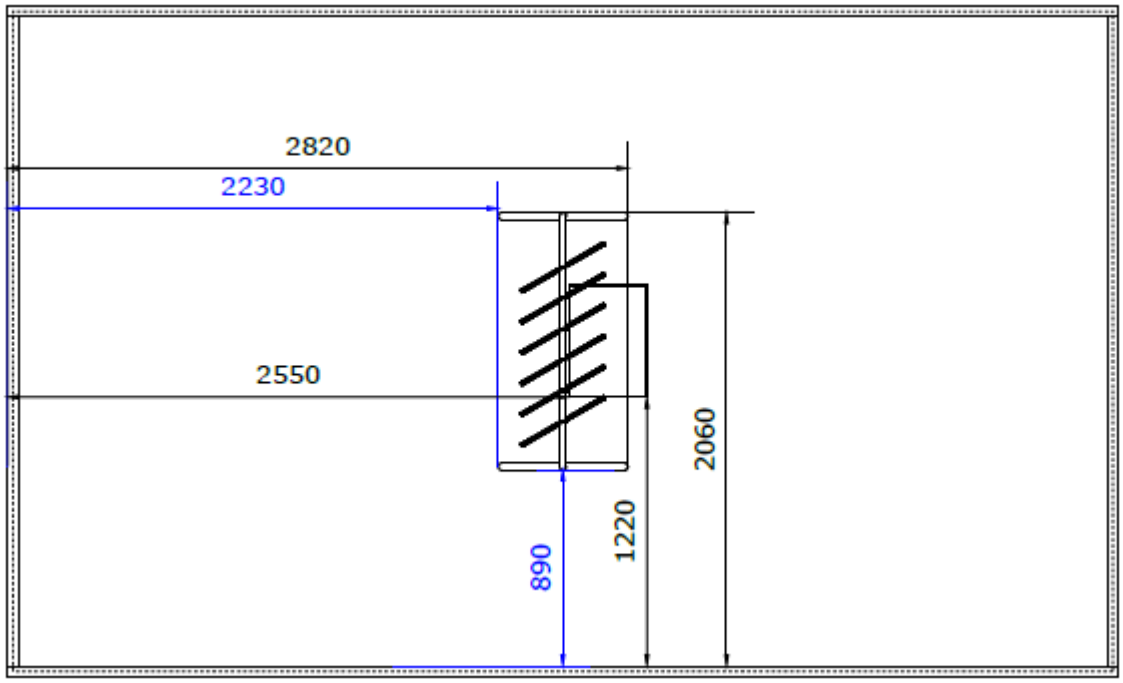

I.10.8.3 Infrastructure dimensions

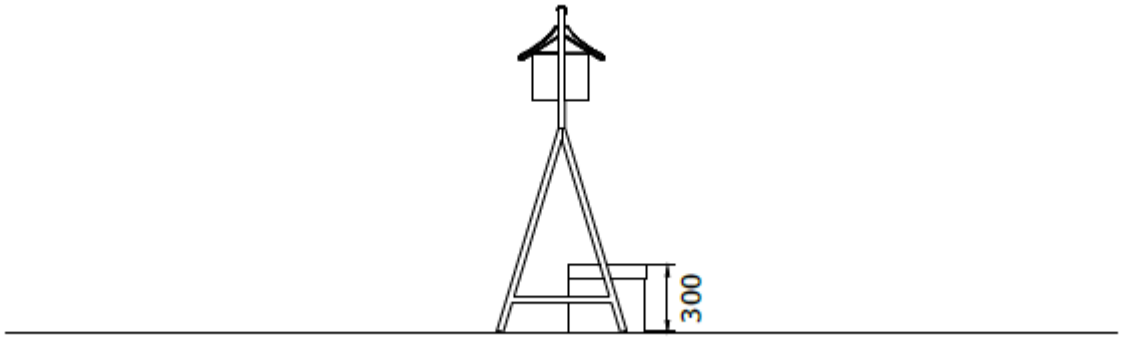

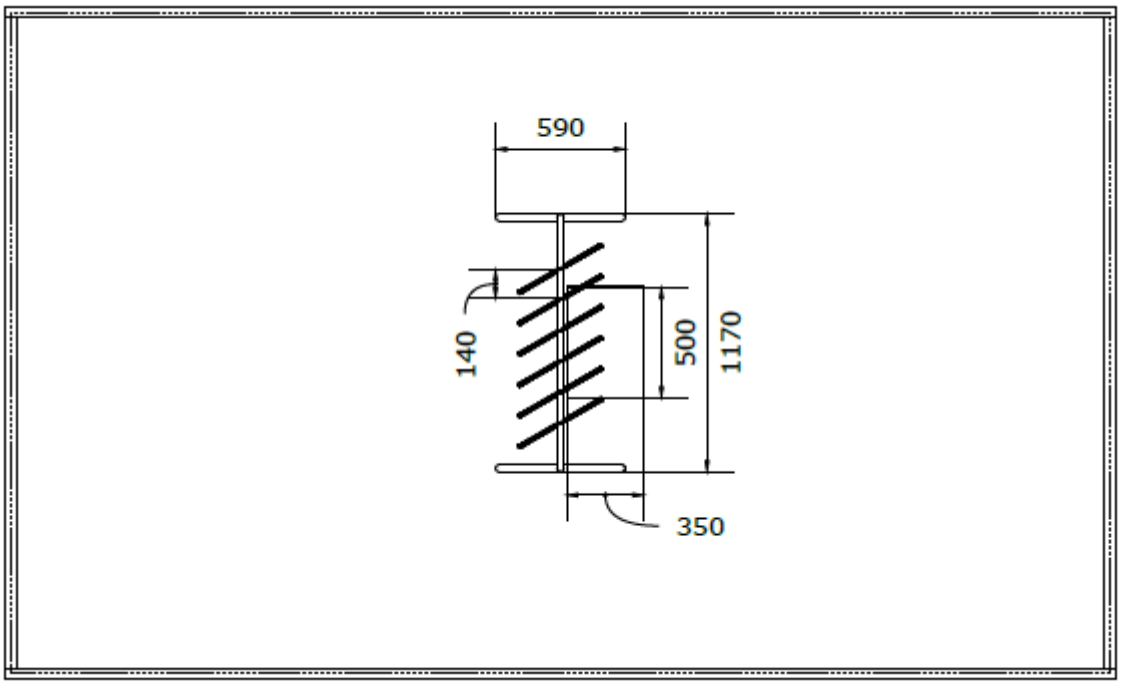
590
140
500
1170
350

I.10.9 Touchscreen

I.10.9.1 Task infrastructure

Units	Object description	Details	Modifications
1	Shelving unit	Kallax 1x4	IKEA
1	Tablet fixation	See source or any similar model fulfilling the following specifications: - restrained design - preferred colours: black, grey	Durable
1	Tablet	Galaxy Tab A8 We recommend setting the tablets into "kiosk mode". This prevents pilots from exiting the CYBATHLON app or opening another app by mistake. https://www.youtube.com/watch?v=vRzOI-VDhA7s	Samsung

I.10.9.2 General task set-up

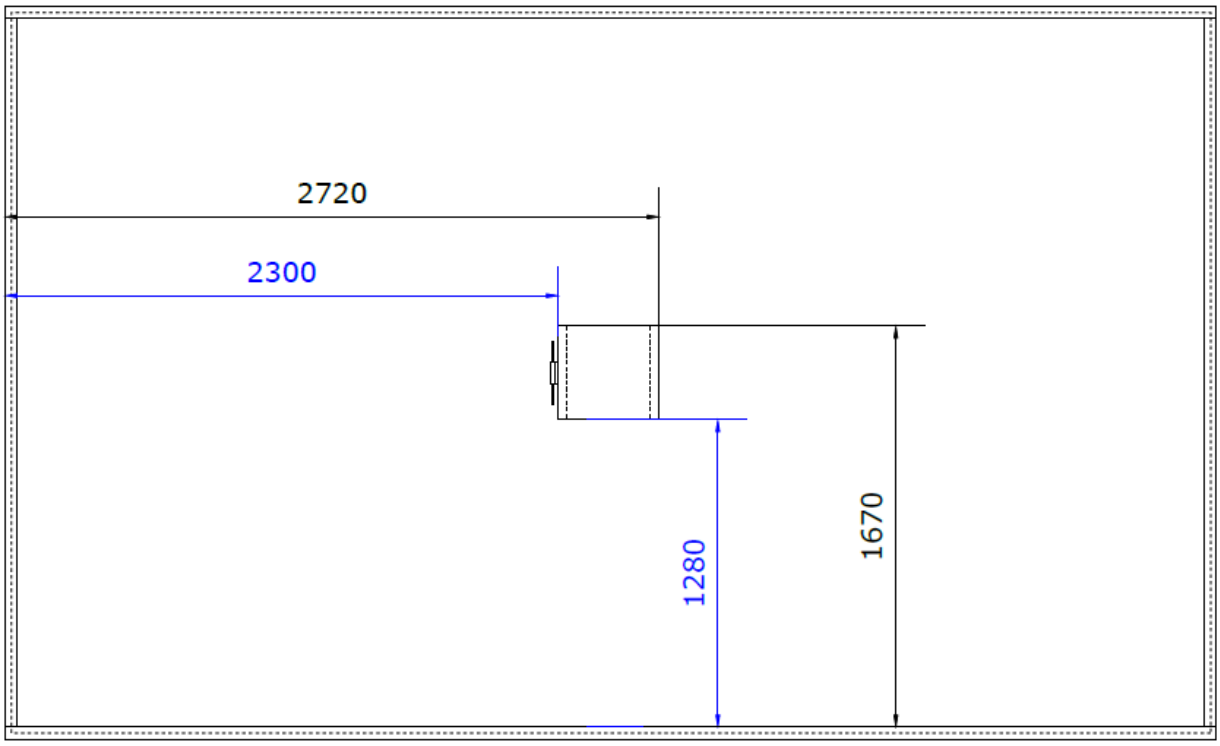

I.10.9.3 Infrastructure dimensions

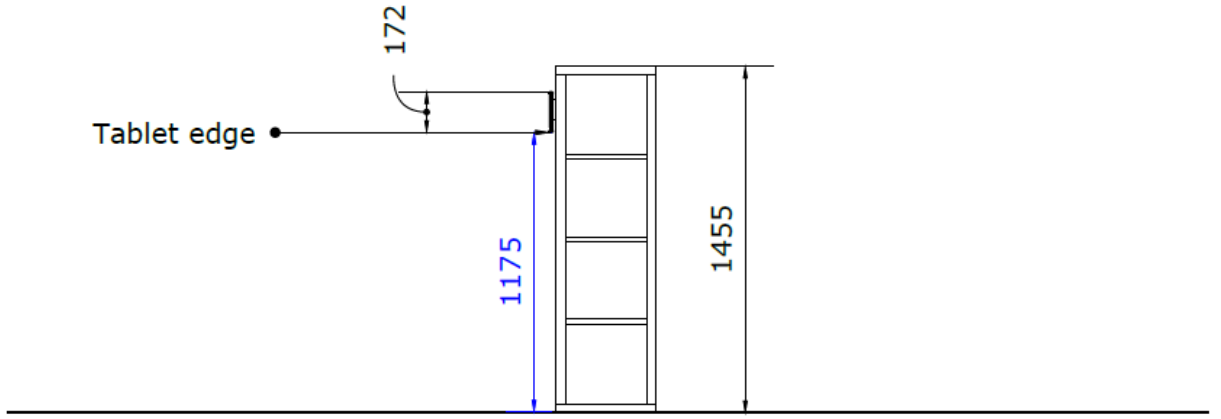

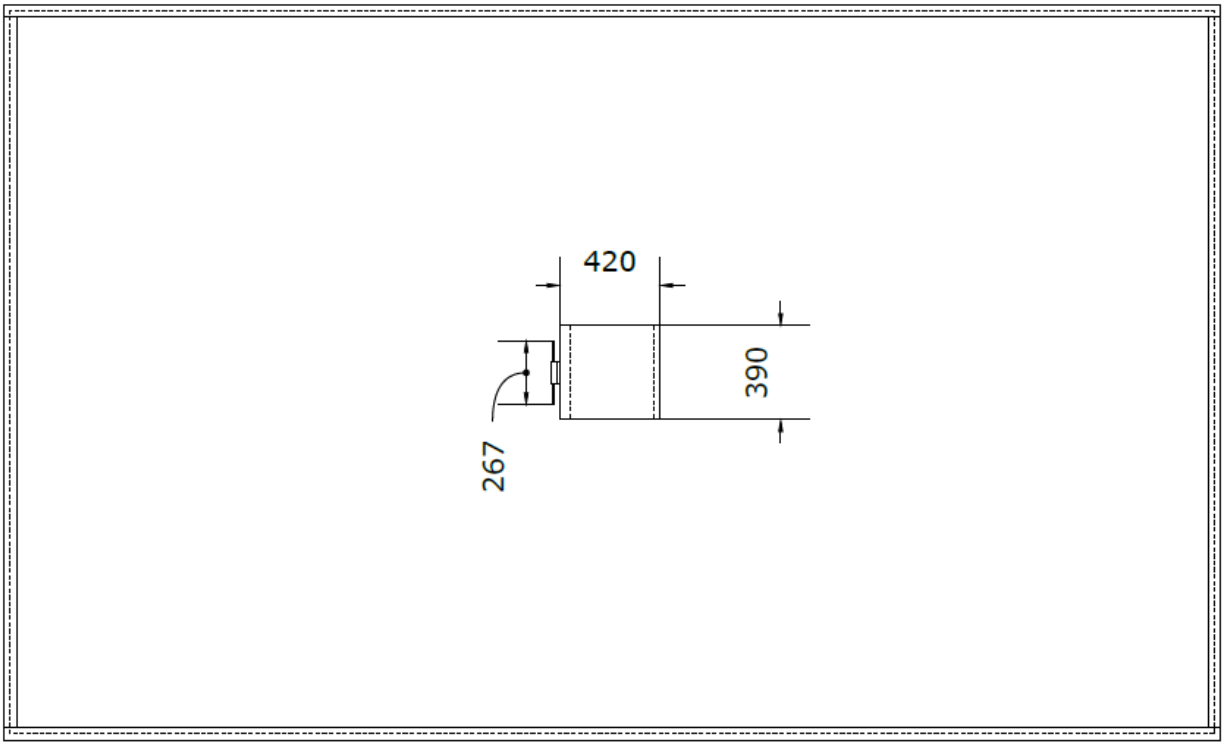

I.10.10 Forest

I.10.10.1 Task infrastructure

Units	Object description	Details / Model	Source
1	Grid		custom made
6	T-shape	Wooden (same within all task), crossbar mounted on top of pole	custom made
3	Pole	Wooden (same within all task)	custom made
9	Cubic socle	Wooden (same within all task), with 25mm hole for poles and bars	custom made

I.10.10.1.1 Dimensions of wooden T-shapes and poles

	T 1	T 2	T 3	T 4	T 5	T 6	Pole 1	Pole 2	Pole 3
Height [mm]	250	500	750	1000	1250	1500	500	1000	1250
Crossbar Length [mm]	800	800	800	800	800	800	No crossbar,		

I.10.10.2 General task set-up

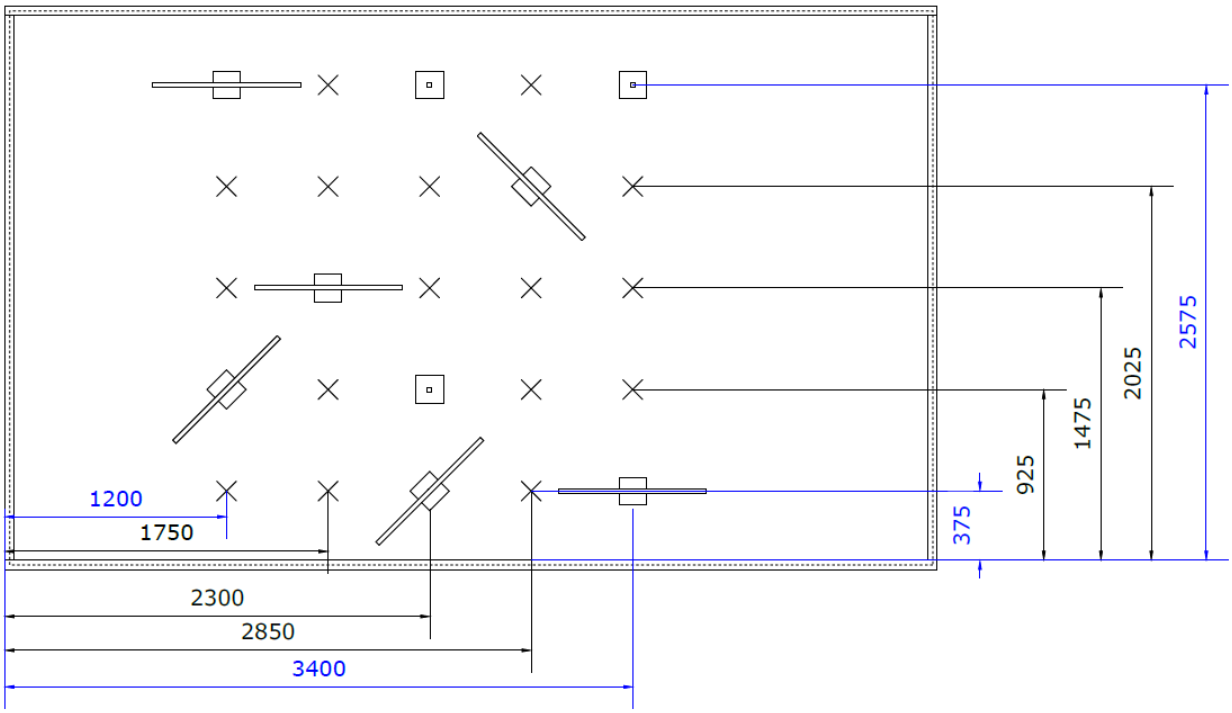

I.10.10.3 Infrastructure dimensions

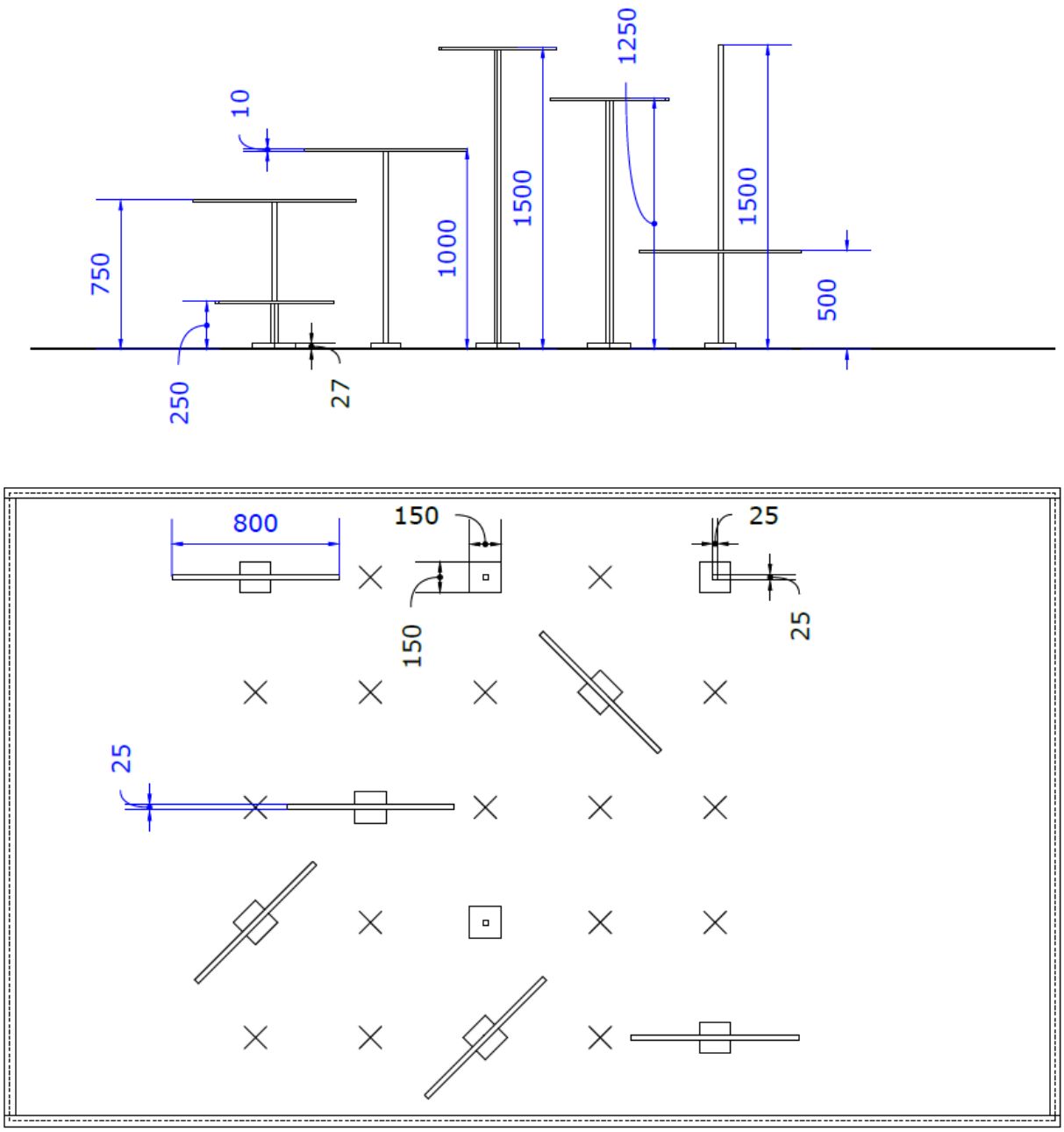

I.10.10.4 Specific marking instructions

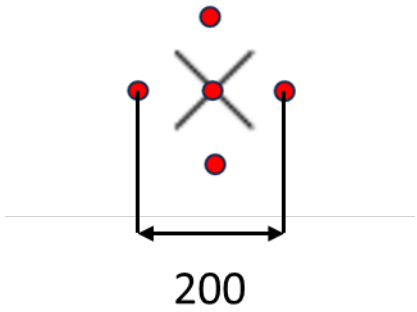

For every cross in the General task set-up picture five points (<10mm in diameter) have to be marked on the racetrack. This is important to position and rotate the objects. The crosses themselves are not allowed to be marked on the racetrack.

This is an exception to the general marking specification (see I.2.4.2). The exception should facilitate randomization procedures.